PAS 8810:2016

Tunnel design – Design of concrete segmental tunnel linings – Code of practice

hs2 engine for growth

British Tunnelling Society

bsi.

Publishing and copyright information

ISBN 978 0 580 88170 1

ICS 93.060

Front cover photograph: © Crossrail Ltd.

Publication history

First published April 2016

Contents

List of tables

Foreword

This PAS was sponsored by High Speed Two (HS2) Limited and the British Tunnelling Society (BTS). Its development was facilitated by BSI Standards Limited and it was published under licence from The British Standards Institution. It came into effect on 30 April 2016.

Acknowledgement is given to Hyuk-Il Jung, Chris Peaston, Bryan Marsh, Michael Devriendt, Michele Mangione, Eden Almog and Rob Harding of Arup as the technical authors, and the following organizations that were involved in the development of this PAS as members of the steering group:

- Arup
- Atkins
- Balfour Beatty
- British Tunnelling Society (BTS)
- CH2M Hill
- Costain
- Crossrail
- Donaldson Associates
- Dragados
- Health and Safety Executive (HSE)
- Highways England
- High Speed Two (HS2) Limited
- INECO
- London Underground
- Mott MacDonald
- Network Rail
- OTB Concrete
- Skanska
- Thames Tideway
- University College London, Department of Civil Engineering
- UnPS
- VINCI
- Co-opted members

Acknowledgement is also given to the members of a wider review panel who were consulted in the development of this PAS.

This PAS is not to be regarded as a British Standard. It will be withdrawn upon publication of its content in, or as, a British Standard.

The PAS process enables a code of practice to be rapidly developed in order to fulfil an immediate need in industry. A PAS can be considered for further development as a British Standard, or constitute part of the UK input into the development of a European or International Standard.

Relationship with other publications

This PAS is expected to be used in conjunction with BS 6164, which makes recommendations for and gives guidance on health and safety practices in tunnel design and construction.

Use of this document

It has been assumed in the preparation of this PAS that the execution of its provisions will be entrusted to appropriately qualified and experienced people, for whose use it has been produced.

Presentational conventions

The provisions of this PAS are presented in roman (i.e. upright) type. Its recommendations are expressed in sentences in which the principal auxiliary verb is “should”. The word “may” is used to express permissibility and the word “can” is used to express possibility, e.g. a consequence of an action or an event.

Commentary, explanation and general informative material is presented in italic type, and does not constitute a normative element.

Spelling conforms to The Shorter Oxford English Dictionary. If a word has more than one spelling, the first spelling in the dictionary is used (e.g. "organization" rather than "organisation").

Contractual and legal considerations

This publication does not purport to include all the necessary provisions of a contract. Users are responsible for its correct application.

Compliance with a PAS cannot confer immunity from legal obligations.

Particular attention is drawn to the following specific regulations:

- Construction (Design and Management) Regulations 2015 [1];
- Construction Products Regulations 2013 [2]; and
- Health and Safety at Work etc. Act 1974 [3].

Introduction

HS2 and BSI engaged with a number of construction industry stakeholders to identify areas in which it was felt that the industry could benefit from further standardization.

PAS 8810 was developed specifically to cover the design of segmental tunnel linings, which was identified as an area in which additional standardization was required. Segmental tunnel linings are currently designed with reference to a large number of published general building standards and industry documents, together with several Eurocodes. However, there is no codified or standardized design document that applies specifically to precast concrete segmental tunnel linings, and the volume of relevant standards, guidance and documentation has led to both conflicting guidance and requirements, and the misinterpretation and misapplication of standards. PAS 8810 therefore aims to bring together existing standards and industry documents into a single, usable standardization document while simultaneously reducing unnecessary administration and delay by streamlining, clarifying and standardizing the design process for segmental lining design.

Clauses **4** to **8** cover the more general aspects of tunnel design and do not restrict the designer to a single construction methodology at the conceptual design stage, as a designer would not limit their study only to segmental tunnel lining design. Clauses **9** to **12** provide specific, technical information on precast concrete lining elements for segmental tunnel linings.

At the time of publication, the intention is to standardize further areas of tunnel lining design in the near future including sprayed concrete linings and cast-in-situ linings.

As tunnel construction technology is fast changing, some of the recommendations set out in this PAS might not be fully applicable to a newly-introduced technology that does not exist at the time of this PAS publication.

This PAS is not intended to limit the design flexibility or the adoption of new technology, and, as such, is not intended to be used as a barrier that prevents the adoption of innovative designs.

A number of other areas were identified as benefitting from standardization. A wider programme of work is underway to develop a further three PASs:

- PAS 8811, *Temporary works – Client procedures – Code of practice* (in preparation), which gives recommendations for UK infrastructure client procedures with respect to temporary works construction projects, from planning through to removal.
- PAS 8812, *Temporary works – Application of European Standards in design – Guide*, which gives guidance on the application of European Standards in the design of temporary works in the UK for practitioners in the fields of structural and geotechnical temporary works design.
- PAS 8820, *Construction materials – Alkali-activated cementitious material and concrete – Specification*, which specifies requirements for alkali-activated cementitious binders for suppliers of alkali-activated binders, ready mixed concrete, engineers and architects, contractors, asset owners and end users.

This page is deliberately left blank.

1 Scope

This PAS makes recommendations for the design of concrete segmental tunnel linings. It covers design considerations from project inception through to the end of the service life of the tunnel. At the early stage of the design (e.g. conceptual design stage), the study of the options for the selection of the tunnel lining is not limited to concrete segmental tunnel linings. Thus Clauses **4** to **8** in the PAS are applicable to tunnels with all types of linings. Clauses **9** to **12** give specific recommendations on the design of concrete segmental tunnel linings.

This PAS is for use by design engineers (usually directly employed by the client but this could sometimes be the contractor's designer, for example, in a design and build project) and clients (usually the owner of the tunnel who is responsible for the design and construction of concrete tunnel linings) and contractors.

The PAS sets out detailed design recommendations by referencing existing national standards (BS, BS EN) or internationally-recognized industry standards. Technical requirements from existing standards are referenced, rather than repeated. Specific design recommendations are included only for the design items that are not available from existing standards.

This PAS covers:

1) functional requirements;
2) conceptual design;
3) characterization of ground;
4) materials design and specification;
5) material characterization and testing;
6) limit state design;
7) concrete segmental lining design;
8) concrete segment lining modelling;
9) instrumentation and monitoring; and
10) design management.

This PAS does not cover:

a) sprayed concrete lined tunnels;
b) cast-in-situ concrete lined tunnels;
c) any tunnel lining using material other than concrete, such as spheroidal graphite iron or steel;
d) cut and cover tunnels;
e) drill and blast excavations;
f) hard rock tunnelling;
g) pipe jacking; and
h) project planning and management.

NOTE 1 *Recommendations for health and safety practices in tunnel construction are given in BS 6164.*

NOTE 2 *Requirements for handling ground support elements are given in BS EN 16191.*

2 Normative references

Standards publications

The following documents, in whole or in part, are normatively referenced in this document and are indispensable for its application. For dated references, only the edition cited applies. For undated references, the latest edition of the referenced document (including any amendments) applies.

BS 4449, *Steel for the reinforcement of concrete – Weldable reinforcing steel – Bar, coil and decoiled product – Specification*

BS 6164, *Code of practice for health and safety in tunnelling in the construction industry*

BS 6744, *Stainless steel bars for the reinforcement of and use in concrete – Requirements and test methods*

BS 7979, *Specification for limestone fines for use with Portland cement*

BS 8500-1, *Concrete – Complementary British Standard to BS EN 206 – Part 1: Method of specifying and guidance for the specifier*

BS 8500-2, *Concrete – Complementary British Standard to BS EN 206 – Specification for constituent materials and concrete*

BS EN 206:2013, *Concrete – Specification, performance, production and conformity*

BS EN 450-1, *Fly ash for concrete – Part 1: Definition, specifications and conformity criteria*

BS EN 934-2, *Admixtures for concrete, mortar and grout – Part 2: Concrete admixtures – Definitions, requirements, conformity, marking and labelling*

BS EN 1008, *Mixing water for concrete – Specification for sampling, testing and assessing the suitability of water, including water recovered from processes in the concrete industry, as mixing water for concrete*

BS EN 1990, *Eurocode – Basis of structural design*

BS EN 1992-1-1, *Eurocode 2: Design of concrete structures – Part 1-1: General rules and rules for buildings*

BS EN 1997-1, *Eurocode 7: Geotechnical design – Part 1: General rules*

BS EN 12110, *Tunnelling machines – Air locks – Safety requirements*

BS EN 12620, *Aggregates for concrete*

BS EN 13055-1, *Lightweight aggregates – Part 1: Lightweight aggregates for concrete, mortar and grout*

BS EN 13263-1, *Silica fume for concrete – Part 1: Definitions, requirements and conformity criteria*

BS EN 13369, *Common rules for precast concrete products*

BS EN 14651, *Test method for metallic fibre concrete – Measuring the flexural tensile strength (limit of proportionality (LOP), residual)*

BS EN 14889-1, *Fibres for concrete – Part 1: Steel fibres – Definitions, specifications and conformity*

BS EN 14889-2, *Fibres for concrete – Part 2: Polymer fibres – Definitions, specifications and conformity*

BS EN 15167-1, *Ground granulated blastfurnace slag for use in concrete, mortar and grout – Part 1: Definitions, specifications and conformity criteria*

BS EN 16191, *Tunnelling machinery – Safety requirements*

BS EN ISO 14688-1, *Geotechnical investigation and testing – Part 1: Identification and classification of soil – Identification and description*

BS EN ISO 14688-2, *Geotechnical investigation and testing – Part 2: Identification and classification of soil – Principles for a classification*

BS EN ISO 14689-1, *Geotechnical investigation and testing – Part 1: Identification and classification of rock – Identification and description*

BS ISO 13270, *Steel fibres for concrete – Definitions and specifications*

NA to BS EN 1992-1-1, *UK National Annex to Eurocode 2: Design of concrete structures – Part 1-1: General rules and rules for buildings*

PAS 1192-2, *Specification for information management for the capital/delivery phase of construction projects using Building Information Modelling*

Other publications

[NR1] BRITISH TUNNELLING SOCIETY. Tunnel Lining Design Guide, Thomas Telford Books, 2004.

[NR2] BRITISH TUNNELLING SOCIETY. Specification for Tunnelling, Third edition, Thomas Telford Books, 2010.

[NR3] NICHOLSON, D., TSE, C.M., and PENNY, C. The Observational Method in Ground Engineering–Principles and Applications. Report 185. London: CIRIA, 1999.

[NR4] RILEM TC 162-TDF: Test and design methods for steel fibre reinforced concrete, σ-ε-design method – Final Recommendation. *In: Materials and Structures/ Materiaux et Constructions*, 2003, Vol. 36, October, pp. 560-567.

[NR5] FEDERATION INTERNATIONALE DU BETON. fib Model Code for Concrete Structures 2010, Berlin: Ernst & Sohn, 2013.

[NR6] INTERNATIONAL TUNNELLING ASSOCIATION. Guidelines for the Design of Tunnels, WG on General Approaches to the design of tunnels. *In: Tunnelling and Underground Space Technology*, ITA, 1988, Vol. 3, No.3, pp. 237-249.

[NR7] INTERNATIONAL TUNNELLING ASSOCIATION. Seismic design and analysis of underground structures. *In: Tunnelling and Underground Space Technology*, 16, ITA, 2001. pp. 247-293.

[NR8] DIXON, J.D. Analysis of tunnel support structure with consideration of support-rock interaction, U.S. Bureau of Mines Rept., Invest. No. 7526, 1971.

[NR9] INTERNATIONAL TUNNELLING ASSOCIATION. Guidelines for the Design of Shield Tunnel Lining, WG No.2. *In: Tunnelling and Underground Space Technology*, ITA, 2000, Vol. 15, No.3, pp. 303-331.

3 Terms, definitions and abbreviations

3.1 Terms and definitions

For the purposes of this PAS, the following terms and definitions apply. General tunnel lining design terms not defined in this document can be found in the BTS, *Tunnel Lining Design Guide* [NR1].

3.1.1 action

3.1.1.1 accidental action

action, usually of short duration but of significant magnitude, that is unlikely to occur on a given structure during the design working life

[SOURCE: BS EN 1990:2002+A1:2005, **1.5.3.5**]

NOTE *An accidental action can be expected in many cases to cause severe consequences unless appropriate measures are taken.*

3.1.1.2 permanent action

action that is likely to act throughout a given reference period and for which the variation in magnitude with time is negligible, or for which the variation is always in the same direction (monotonic) until the action attains a certain limit value

[SOURCE: BS EN 1990:2002+A1:2005, **1.5.3.3**]

3.1.1.3 variable action

action for which the variation in magnitude with time is neither negligible nor monotonic

[SOURCE: BS EN 1990:2002+A1:2005, **1.5.3.4**]

3.1.2 approval in principle (AIP)

document which records the agreed basis and criteria for the detailed design or assessment of a tunnel lining structure

3.1.3 category (cat)

level of design check required that takes account of the risk and complexity of design

3.1.4 conceptual design

high-level design stage carried out to develop a preferred single design option that complies with the client's functional requirements

NOTE *For the client's functional requirements, see* ***4.1****.*

3.1.5 concrete

material formed by mixing cement, coarse and fine aggregate and water, with or without the incorporation of admixtures and additions, which develops its properties by hydration of the cement

[SOURCE: BS EN 206:2013, **3.1.1.1**]

3.1.5.1 addition

finely-divided-inorganic constituent used in concrete in order to improve certain properties or to achieve special properties

[BS EN 206:2013, **3.1.2.1**]

3.1.5.2 additional protective measures (APMs)

measures taken to protect concrete where it is considered that the basic provisions of the concrete specification might not provide adequate resistance to chemical attack

[SOURCE: BRE Special Digest 1]

3.1.5.3 combination

restricted range of Portland cements and additions which, having been combined in the concrete mixer, count fully towards the cement content and water/cement ratio in concrete

3.1.5.4 designed concrete

concrete specified by strength class, consistence and any required limitations on composition

NOTE 1 *For example, cement or combination type, minimum cement or combination content, maximum water/cement ratio.*

NOTE 2 *Additional requirements can be specified, e.g. strength development, resistance to water penetration.*

3.1.5.5 designated concrete

concrete specified by a designation from a list of possible concretes

NOTE *The designation relates to specific limitations on the concrete including strength class, water/cement ratio, cement or combination content and cement or combination type. Further limitations can be specified.*

3.1.5.6 prescribed concrete

concrete specified by the exact required composition and constituent materials including cement or combination, aggregates and admixtures

NOTE *Performance requirements, e.g. concrete strength, cannot be specified for prescribed concrete.*

3.1.5.7 proprietary concrete

concrete specified by reference to a product name for a particular concrete offered by a particular producer to meet specific claimed performance

NOTE *The producer is not required to provide information on the composition of the concrete.*

3.1.5.8 standardized prescribed concrete

concrete specified by a designation from BS 8500-2:2015, Table 10 relating to a specific composition of concrete

NOTE 1 *For example, ST5.*

NOTE 2 *Performance requirements, e.g. concrete strength, cannot be specified for standardized prescribed concrete.*

3.1.6 construction tolerance

permissible deviation from the designed geometry of the lining

NOTE *For example, location of lining relative to designed position, variation in lining thickness, deviation of surface.*

3.1.7 critical national infrastructure

infrastructure elements, the loss or compromise of which would have a major detrimental impact on the availability or integrity of essential services, leading to severe economic or social consequences or to loss of life

3.1.8 design gate

stage in the design approval and acceptance process that the design has to pass before proceeding to the next stage

3.1.9 design situation

set of physical conditions representing the real conditions occurring during a certain time interval for which the design demonstrates that relevant limit states are not exceeded

3.1.9.1 accidental design situation

design situation involving exceptional conditions of the structure or its exposure, including fire, explosion, impact or local failure

3.1.9.2 persistent design situation

design situation that is relevant during a period of the same order as the design working life of the structure

3.1.9.3 seismic design situation

design situation involving exceptional conditions of the structure when subjected to a seismic event

3.1.9.4 transient design situation

design situation that is relevant during a period much shorter than the design working life of the structure and which has a high probability of occurrence

NOTE *A transient design situation refers to temporary conditions of the structure, of use, or exposure, e.g. during construction or repair.*

3.1.10 design verification

process of establishing the validity of the design

NOTE *Design verification confirms design results or parameters that meet standard document requirements and/or the designer's intent.*

3.1.11 design working life

period of time during which the item is expected by its designers to work within its specified parameters

3.1.12 desk study

preliminary investigation and report which collates currently available, relevant information

3.1.13 feasibility options report

report that provides the details and results of feasibility study options

3.1.14 fire

3.1.14.1 design fire load

maximum fire load to be considered for the design of the tunnel lining

NOTE *The design fire load is normally given in Watts and is commonly known as a time-temperature curve.*

3.1.14.2 fire curve

change in temperature experienced at the surface of a structure over a given time frame due to a fire event

3.1.15 geotechnical baseline report (GBR)

contractual document that establishes a definitive statement of the contractually defined geotechnical conditions relevant to the tunnel

NOTE *The report is used as a baseline for contractual reference.*

3.1.16 geotechnical design report (GDR)

report that includes geotechnical assumptions, data, methods of calculation and results of the verification of safety and serviceability

[SOURCE: BS EN 1997-1:2004+A1:2013, **2.8**, modified]

3.1.17 ground investigation report (GIR)

report that includes factual geotechnical information and evaluation of the information

[SOURCE: BS EN 1997-1:2004+A1:2013, **3.4**, modified]

3.1.18 grouting

3.1.18.1 annulus grouting

grouting required to fill the planned gap/voids between the excavated profile of ground and the extrados of linings

3.1.18.2 cavity grouting

grouting required to fill the unexpected/unplanned gap/voids between the excavated profile of ground and the extrados of linings

3.1.19 hydraulic failure

ground failure mode induced by pore-water pressure or pore-water seepage

[SOURCE: BS EN 1997-1:2004+A1:2013, **10**, modified]

3.1.20 joint

3.1.20.1 birdsmouthing

opening of radial joint on one side due to deformation of the tunnel lining

3.1.20.2 bursting (failure)

tensile failure of concrete at a joint of the tunnel lining which is induced by excessive compressive contact stress at the joint contact face

3.1.20.3 circumferential joint

joint formed between the two adjoining concrete sections normal to the direction of tunnel alignment

NOTE *A circumferential joint is sometimes referred to as a circle joint.*

3.1.20.4 groove

small recess formed around the segment edges to accommodate gaskets or caulking materials

3.1.20.5 lip

misalignment between two segments along a radial joint in direction of tunnel radius

3.1.20.6 radial joint

joint formed between precast concrete segments in a ring along the direction of tunnel

NOTE *A radial joint is sometimes referred to as a longitudinal joint.*

3.1.20.7 step

misalignment between two segments along a circumferential (circle) joint in direction of tunnel radius

3.1.21 limit state

state beyond which the structure no longer fulfils the relevant design criteria

[SOURCE: BS EN 1990:2002+A1:2005, **1.5.2.12**]

3.1.21.1 serviceability limit state

state that correspond to conditions beyond which the specified service requirements for a structure or structural member are no longer met

[SOURCE: BS EN 1990:2002+A1:2005, **1.5.2.14**]

3.1.21.2 ultimate limit state

state associated with the collapse or with other similar forms of structural failure

[SOURCE: BS EN 1990:2002+A1:2005, **1.5.2.13**]

3.1.22 lining

3.1.22.1 primary lining

tunnel lining structure that is designed to take any actions immediately following excavation over a prescribed period of time

NOTE *A primary lining is sometimes called a temporary lining when secondary lining is designed to take all design actions and loads over the design target life.*

3.1.22.2 secondary lining

tunnel lining structure that is designed to take full or part of design actions and loads over the design working life

NOTE 1 *The secondary lining depends on the design principle of the primary lining.*

NOTE 2 *When the primary lining is designed as a temporary structure, the secondary lining is referred to as the permanent lining.*

3.1.23 parties

3.1.23.1 client

organizations or individuals for whom a construction project is carried out

[SOURCE: HSE CDM Regulations 2015]

NOTE *The client is generally the same as the organization or group who own, operate and maintain the tunnel structure, but it depends on the type of contract.*

3.1.23.2 contractor

any person (including a non-domestic client) who, in the course or furtherance of a business, carries out, manages or controls construction work

[SOURCE: HSE CDM Regulations 2015]

3.1.23.3 designer

those, who as part of a business, prepare or modify designs for a building, product or system relating to construction work

[SOURCE: HSE CDM Regulations 2015]

3.1.23.4 employer

organization or group of people who employs the designer

NOTE *This could be the client, the contractor or another designer depending on the type of contract.*

3.1.23.5 principal contractor

contractor appointed by the client to co-ordinate the construction phase of a project where it involves more than one contractor

[SOURCE: HSE CDM Regulations 2015]

3.1.23.6 principal designer

designer appointed by the client in projects involving more than one contractor who has the legal duty to plan, manage and co-ordinate health and safety in the pre-construction phase of the project

NOTE *The principal designer can be an organization or an individual with sufficient knowledge, experience and ability to carry out the role.*

[SOURCE: HSE CDM Regulations 2015]

3.1.24 requirements

3.1.24.1 functional requirements

requirements defined and provided by the client to ensure the tunnel meets its functional objectives over the design working life

NOTE *Functional requirements include operational, security, durability requirements.*

3.1.24.2 operational requirements

requirements defined and provided by the client to ensure normal operation of the tunnel over its design working life

NOTE *For example, the speed of the train, or water flow rate.*

3.1.25 segment

3.1.25.1 clocking position

equally spaced bolt/dowel position on the circumferential joint to allow for rotation of each ring relative to the previous ring

3.1.25.2 key draw

clear length needed from the leading edge of the ring to place the key segment

3.1.26 smooth-bore

segment that has smooth internal surface finish

NOTE *It can have small recess close to the perimeter of the segment for bolt assembly.*

3.1.27 soft ground

ground that requires a lining to maintain stability during and/or after excavation

3.1.28 temporary works

part of the works that allows or enables construction of, protects, supports or provides access to, the permanent works and which might or might not remain in place at the completion of the works

NOTE *Examples of temporary works are structures, supports, back-propping, earthworks and accesses.*

[SOURCE: BS 5975:2008+A1:2011, **3.40** modified]

3.1.29 trigger levels

measure of a parameter at which a pre-defined action occurs

NOTE *That action could be to do nothing, for example, at a green trigger level.*

3.1.30 volume loss

volume of the surface settlement trough per linear metre expressed as a percentage of the theoretical excavated volume per linear metre

NOTE *This is sometimes referred to as ground loss.*

3.2 Abbreviations

For the purposes of this PAS the following abbreviations apply.

ACEC	aggressive chemical environment for concrete
AIP	approval in principle
APM	additional protective measure
BEM	boundary element method
BIM	building information modelling
CCM	convergence-confinement method
CDM	construction (design and management)
CDS	concept design statement
CSTR	Concrete Society technical report
D&C	design and construct
DC	design chemical (class)
DEM	discrete element method
EN	Euronorm
EPDM	ethylene propylene diene monomer
FD	finite difference
FE	finite element
FRC	fibre reinforced concrete
GBR	geotechnical baseline reports
GDR	geotechnical design reports
GIR	ground investigation reports
GIS	geographic information system
hENs	harmonized European product standards
IDR	interdisciplinary review
MSFRC	macro synthetic fibre reinforced concrete
NATM	new Austrian tunnelling method
PFI	private finance initiative
RSES	register of security engineers and specialists
SCL	sprayed concrete lining
SDR	single disciplinary review
SFRC	steel fibre reinforced concrete
SGI	spheroidal graphite iron
SLS	serviceability limit state
TBM	tunnel boring machine
ULS	ultimate limit state
WG	working group

4 Functional requirements

4.1 General

4.1.1 The designer should design and size the tunnel lining to meet the functional requirements of the specific project.

4.1.2 The designer should undertake a project-specific review to assess all of the parameters that affect the size and the design of the tunnel lining in order to meet the functional requirements of the client, as given in **4.3** and to ensure there is adequate working space to construct the tunnel safely. The results of the project-specific review should be documented.

4.1.3 The designer should assess the typical elements set out in Table 1 and, where relevant, document their impact on the tunnel's sizing and lining design.

Table 1 – Typical elements differentiated from the type of tunnel and associated design issues

Tunnel types	Elements differentiated from the type of tunnel	Design issues
Transportation tunnels	• Rail and track form (for rail tunnel), pavement form (for road tunnel)	• Sizing, operational train or vehicle load to lining
	• Structure gauge	• Sizing
	• Overhead power line or third rail (for rail tunnel)	• Sizing
	• Intervention and evacuation walkways	• Sizing, walkway design, cross passage spacing, derailment containment
	• Firefighting equipment	• Sizing
	• Drainage system	• Sizing
	• Service cables/electrical and mechanical equipment	• Sizing
	• Ventilation/smoke control/overhead jet fans/overhead ventilation ducts/lighting/signage and other services	• Sizing
	• Aerodynamics	• Transient pressure criteria for high-speed rail, sizing
	• Cladding and finishes including support system	• Sizing, durability of support system
Water/sewerage tunnels	• Water head loss – surface roughness	• Joint design, secondary lining design (sizing)
	• Internal pressure maintenance	• Joint design, water tightness design – leakage and external water pressures
Cable tunnel	• Number of service cables and pipes, fixing/hanging method	• Sizing
	• Accessibility of people/equipment	• Sizing
	• Electromagnetic clearance and separation	• Sizing
	• Temperature control (ventilation and cooling)	• Sizing
	• Drainage system	• Sizing

4.2 Health and safety requirements

4.2.1 The client should provide the designer with the health and safety requirements for the project. Such requirements should satisfy the safety requirements during construction, operation and maintenance of the tunnels.

NOTE 1 *Attention is drawn to the Construction (Design and Management) Regulations 2015 (CDM) [1] which impose statutory duties on designers to consider health and safety.*

NOTE 2 *The designer of the tunnel lining may be different from the "Principal Designer" and the "Principal Contractor" defined in the CDM Regulations 2015.*

4.2.2 The designer should design and size the tunnels to fulfil the client's health and safety requirements.

4.2.3 The designer should apply health and safety practices relating to tunnel design and construction in accordance with BS 6164.

NOTE *BS 6164:2011,* ***6.1*** *highlights the importance of the integral nature of design and construction for tunnelling projects. Recommendations for the design of tunnel lining with consideration of Health and Safety requirements are given in BS 6164:2011, Clause* ***8****.*

4.3 Client's project-specific functional requirements

4.3.1 General

The designer should review the client's project-specific functional requirements and incorporate these into the design and sizing of the tunnel lining.

NOTE *The client's project-specific functional requirements are commonly defined in the client's design standards or the client's project brief, but might also be prepared by the designer employed by the client.*

4.3.2 Operational requirements

4.3.2.1 The client should document the project's operational requirements and provide these to the designer.

4.3.2.2 If there is no available documentation from the client that states the operational requirements of the infrastructure, the designer should request this information from the client as early as possible.

NOTE *Having the client's operational requirement details during the concept design stage can minimize the risk of resizing the tunnel lining in subsequent stages.*

4.3.2.3 As a minimum, the client should include in their operational requirements document, the project's:

a) operational requirements (see **4.3.2.1** and **4.3.2.2**);
b) security requirements (see **4.3.3**);
c) durability requirements (see **4.3.4**);
d) repair and maintenance requirements (see **4.3.5**);
e) fire safety requirements (see **4.3.6**);
f) water tightness requirements;
g) contractual requirements (not covered in this PAS); and
h) legal requirements (not covered in this PAS).

NOTE *The client might also provide information relating to project-specific tolerances, deformation limits, and design-checking specifications.*

4.3.3 Security requirements

4.3.3.1 The client should identify whether the tunnel structure forms part of the UK's critical national infrastructure and inform the designer of their findings.

NOTE *Specific security-related design requirements can be applied either by the client or by the government, particularly for major infrastructure assets which might form part of the UK's critical national infrastructure.*

4.3.3.2 Where the tunnel structure is identified as forming part of the UK's critical national infrastructure, the client should consult a relevant expert on the specific counter-terrorist design requirements.

NOTE 1 *A relevant expert could be a member of the Register of Security Engineers and Specialists (RSES).*

NOTE 2 *Where a counter-terrorism expert is consulted, they then consult with government security advisers from the Centre for the Protection of National Infrastructure [1] (CPNI).*

NOTE 3 *Similar notification conditions might also apply when designing for international clients.*

4.3.3.3 The client should provide any security-related design requirements to the designer and these should be incorporated into the design of the tunnel lining.

4.3.4 Durability requirements

4.3.4.1 The client should specify a target design working life for the tunnel lining and provide this to the designer.

NOTE *BS EN 1990 does not specifically cite tunnel structures within its scope although it states that it is applicable for the design of structures where other materials or actions outside the scope of EN 1991 to EN 1999 are involved. NA to BS EN 1990:2002 targets 120 years for the design working life.*

[1] www.cpni.gov.uk

4.3.4.2 The designer should design the tunnel lining to meet the target design working life specified by the client.

4.3.4.3 Tunnels need to be designed, where practicable, to minimize the requirement for maintenance interventions other than visual inspections. To support this requirement, the designer should provide a statement of potential degradation modes identified during the design of the tunnel lining and a schedule of the expected interventions during the design working life.

NOTE *To prepare the schedule of the expected interventions required under* ***4.3.4.3****, the designer needs to consider all components, including structural elements, gaskets and sealing materials and also the ability of all materials to resist degradation by ground, groundwater and the environment throughout the design working life.*

4.3.4.4 The designer should design the durability of tunnel lining in accordance with **7.9**; and the BTS, *Tunnel Lining Design Guide,* Section 4 [NR1].

4.3.4.5 The design needs to cover the durability of all materials used in the tunnel lining as permanent components. Where temporary components are left in place, the designer should assess and document their impact on the durability of the permanent components.

NOTE *Permanent components include concrete, reinforcement and waterproofing systems and all exposure conditions, both internal and external, and on both primary and secondary linings.*

4.3.5 Repair and maintenance requirements

4.3.5.1 The client should develop the project-specific repair and maintenance regime of the tunnel (including internal operational components such as rail, pavement, and cable) and provide the repair and maintenance regime to the designer.

NOTE *Attention is drawn to BS EN 1504-3 for further details on structural concrete repairs.*

4.3.5.2 The designer should identify repair and maintenance requirements for the tunnel (including internal operational components such as rail, pavement, and cable) with reference to the client's project-specific repair and maintenance regime.

4.3.5.3 The designer should provide adequate space and structural capacity in the tunnel lining design, so as to fulfil the identified repair and maintenance requirements.

NOTE *Failing to identify repair and maintenance requirements can lead to changes in the tunnel size and structural redesign in the later stages of design. This can introduce significant cost and programme impacts to the design and construction stages. For example, for a pressurized water tunnel, the client might require regular inspection of the tunnel by draining the tunnel, which means a critical load case for the tunnel lining structural design might occur when the tunnel is drained for its maintenance period, rather than during normal operating conditions.*

4.3.6 Fire safety requirements

NOTE 1 *The ITA document* Guidelines for structural fire resistance for road tunnels *[4] is focused on road tunnels which are exposed to severe hydrocarbon fire scenarios induced by vehicles' fuel. Further fire safety requirements for road tunnels can be found from World Road Association (PIARC)* Road Tunnels Manual *[5].*

NOTE 2 *Railway tunnels (freight, passenger or other) can also be exposed to severe fire events such as the Channel Tunnel fires 1996, 2008 and 2015. The fire resistance of railway tunnels captured by the interoperability regulations are described in COMMISSION REGULATION (EU) No 1303/2014 of 18 November 2014 [6], Technical Specification for Interoperability relating to 'safety in railway tunnels' of the rail system of the European Union.*

NOTE 3 *The extent of the fire damage and the repair required has an impact on the finance of the infrastructure due to the combination of costs for repairing the tunnel and loss of revenue resulting from extended closure of the tunnel.*

4.3.6.1 The client should provide a design fire load, fire curve and post-fire criteria in the design requirements, or provide sufficient information to allow the designer to select the appropriate load, curve and post-fire criteria.

NOTE 1 *Sufficient information may include a reference to appropriate regulation.*

NOTE 2 *Different fire loads and curves might be required for the construction and the operational scenarios.*

NOTE 3 *The fire curve defines the design fire event for the lining design. Further information can be found in EFNARC Specification and guidelines for testing of passive fire protection for concrete tunnels linings [7].*

NOTE 4 *The selection of the fire curve is dependent on the tunnel use and local conditions. Typical examples are included in Figure 1.*

NOTE 5 *The tunnel lining may be exposed to a fire during construction. The designer is expected to verify the suitability of the lining for the construction fire case.*

Figure 1 – Typical fire curves for tunnel design

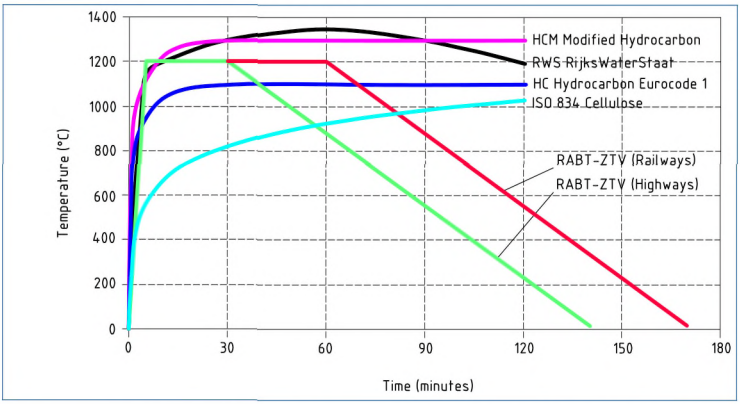

4.3.6.2 The client should set out the criteria that the designer should follow for the structural fire design of the tunnel lining under the selected fire load and curve (see **4.3.6.1**).

4.3.6.3 The designer should assess and document the properties and performance of the concrete using the appropriate test procedure.

NOTE 1 *The required fire resistance can be obtained by the addition of monofilament synthetic fibres to the concrete mix.*

NOTE 2 *There have been a significant number of tests (e.g. CTRL 2003) undertaken on concrete mixes containing monofilament polypropylene fibres with a diameter of <32 microns. These tests have demonstrated acceptable control of explosive spalling where a suitable quantity of monofilament polypropylene fibres has been added to the concrete mix.*

NOTE 3 *The quantity of synthetic fibres per cubic metre of concrete can be verified by fire tests as it is a function of the concrete mix.*

NOTE 4 *An appropriate test method needs to account for the expected in-service loading on the lining as well as the relevant thermal stresses induced by the design fire curve.*

NOTE 5 *The required fire resistance can also be obtained by the application of protective layers.*

4.3.6.4 The designer should design the tunnel lining in accordance with the fire and life safety requirements for the project and assess and document the need for additional active fire-protection measures, including a fire sprinkler system, cross passages, refuges, ventilation and emergency escape.

4.4 Requirements relating to external impacts

NOTE *It is important that the tunnel lining is designed to limit any external impacts on the environment around the tunnel.*

4.4.1 The designer should carry out a detailed review of the external impacts on the environment around the tunnel that can affect the sizing of the tunnel, selection of tunnel lining type, tunnel construction methodology, construction sequence and/or dimensions of staged excavation details.

NOTE *Examples of the external impacts on the environment around the tunnel include impact to existing structures/residences and infrastructures, changes to groundwater level and groundwater pollution.*

4.4.2 The client should undertake research into whether there are any existing or proposed plans for developments that might impact the design of the tunnel lining, and should provide this information to the designer.

4.4.3 Where any existing or proposed plans are found, the designer should make an allowance in the tunnel lining design for any potential impact.

4.4.4 The client should provide information to the designer relating to provisions for future loads/unloads, dewatering and proximity to foundations.

NOTE *Tunnels are often constructed in urban areas and, for this reason, it is common to consider a surcharge load at ground level to provide an allowance for future developments (see* ***9.3.2****). Projects often involve dewatering and historical data shows that the groundwater level has been both higher and lower than its current level in many cities.*

4.5 Sustainability

The designer should design the tunnel lining so as to enable the contractor to deliver the most sustainable lining to meet the performance requirements of the project.

NOTE 1 *Further information on the principles of sustainability in construction works is given in BS EN 15804, BS EN 15978, BS ISO 15392, and PAS 2080 (when published).*

NOTE 2 Guidance relating to *responsible sourcing is given in BES 6001.*

5 Conceptual design

5.1 General

5.1.1 The designer should apply design management in accordance with Annex A to manage the deliverables of the tunnel lining design from conceptual design to detailed design.

5.1.2 The designer should carry out the conceptual design of the tunnel lining upon the request from the client in accordance with the accepted schedule of deliverables (see **A.5**).

NOTE *It is advisable that this takes place at the Gate 2 stage of the project shown in Annex D or an equivalent stage where a modified process is adopted.*

5.1.3 The designer should identify options for the tunnel construction methodology and document these in the conceptual design output.

5.1.4 The designer and the client should discuss and select a single option from the options identified in **5.1.3**, and the option selected should be agreed in writing between the designer and the client in order to proceed to the next design stage.

NOTE 1 *The client can accept multiple options when further study is considered necessary. In this case, the introduction of an intermediate design stage(s) might be required for the selection of a single option.*

NOTE 2 *It is advisable that the client and designer document the reasons for discarding an option to avoid repeating the same option study in the next stage design.*

5.1.5 The designer should carry out conceptual design with consideration given to the following key elements:

a) space-proofing of the tunnel to meet the client's functional requirements;

b) review of the tunnel construction methodology and type of lining structure with consideration given to interactions between multiple drifts, adjacent excavations, geotechnical and hydrogeological conditions (including hazardous substances such as gases), third party and environmental impact;

c) estimation of the tunnel lining structural types and thickness with consideration given to concrete grade and reinforcement type (bar, steel or steel fibres);

d) feasibility study of the tunnel lining's structural integrity under the expected critical loading conditions (e.g. under high internal pressure for water tunnel);

e) identified project-specific technical challenges;

f) tunnel-to-tunnel junctions, such as cross passages;

g) connections with other underground structures such as portals, station box and shafts; and

h) development of tunnel lining design concepts.

5.1.6 The designer should assess and, where relevant, document the following factors to determine the optimal alignment for the project requirements and constraints:

a) the geology or geological features;

b) the length of tunnel, necessity of intermediate shafts and access locations;

c) horizontal and vertical constraints including;

   1) availability and desirability of sites for portals, shafts and stations;

   2) operational constraints such as gradient and curvature minimum radii;

   3) potential obstructions such as existing piles, tunnels, sewers, services and utilities and wells; and

   4) connections to existing infrastructure

d) existing foundations and buildings including listed buildings and heritages; and

e) the legal, environmental, social and political impact.

5.1.7 The designer should undertake a sufficient level of design detail at the conceptual design stage to allow a robust project cost and programme to be determined.

NOTE 1 *The project cost and programme are determined by either the client or the contractor.*

NOTE 2 *Target tolerances can be set by the client, the planning process or funding requirements.*

NOTE 3 *At the conceptual design stage, it is not advisable to carry out a large amount of detailed structural designs. There might be a project-specific critical design element that requires more design effort to demonstrate an option's feasibility. However, it is not usually possible to carry out a detailed review due to the lack of information at the conceptual design stage, such as ground strength parameters and loading conditions from buildings. In this scenario, the designer can make a feasibility conclusion based on a reasonably conservative assumption, but assumptions need to be registered in the risk register document.*

Table 2 – Tunnel construction methodology and associated typical lining types in soft ground tunnelling

Construction method	Structural lining types	
	Temporary support	Permanent support
Mined tunnel (mechanical)	Sprayed concrete lining (SCL)	SCL Cast-in-situ concrete Spheroidal graphite iron (SGI) [A)] Steel Precast concrete segment [A)]
	SGI	
	Precast concrete segment [A)]	
Hand-mined tunnel [B)]	Timber heading	Steel frame and cast-in-situ concrete
	SGI or steel	
Tunnel Boring Machine (TBM)	Precast concrete segment	
	SGI or steel	

NOTE 1 Only precast concrete segment lining design *is covered in this PAS.*

NOTE 2 *This PAS uses the terms "TBM" and "mined" in place of 'mechanized' and "conventional" respectively. While "mechanized" and "conventional" are widely used and internationally-recognized terms in the tunnelling industry, this PAS elects to use "TBM" and "mined" which are considered to be more appropriate, given the scope of the PAS.*

NOTE 3 *TBM tunnelling is one of a number of methods of mechanized tunnelling (for the definition of mechanized tunnelling, see the ITA's website (https://www.ita-aites.org/en/) or BS 6164:2011,* ***7.1****). The term "TBM" is used throughout this PAS to denote that the design of the segment lining is directly linked to the TBM rather than other mechanized tunnelling methods.*

NOTE 4 *Mined tunnelling is one of a number of methods of conventional tunnelling (for the definition of conventional tunnelling, see ITA Working Group 19 publication "General Report on Conventional Tunnelling Method" or BS 6164:2011,* ***7.1****). As the scope of this PAS is limited to tunnelling in soft ground, the specific term "mined" is considered to be more appropriate than the use of the term "conventional".*

[A)] Not a common type under the specified construction method.

[B)] Limited to small diameter tunnels only. Design details not covered in this PAS.

5.2 Selection of tunnel construction methodology

NOTE *Selection of tunnel construction methodology in soft ground conditions has a direct link to the selection of tunnel lining types. Table 2 provides the general relationship between the tunnel construction methods and the types of lining structure.*

5.2.1 The designer's selection of the tunnel construction methodology should conform to BTS, *Specification for Tunnelling,* Section 301 [NR2].

5.2.2 The designer should take account of the functional requirements of any secondary lining, where required.

5.2.3 The designer should select the junction construction method to conform to BTS *Specification for Tunnelling,* Section 311 [NR2] with consideration given to the:

a) main tunnel construction methodology and lining type;
b) branch tunnel construction and lining type;
c) available access space for construction plant and tunnelling operations;
d) escape and refuge during construction;
e) ground and groundwater conditions at the junction;
f) lining break-out method from the main tunnel; and
g) water tightness at the junctions.

NOTE 1 *Junctions such as sumps, niches, cross passages and intersections require breaking out of the lining which is considered to be a high-risk activity.*

NOTE 2 *The junction construction method can differ from the main tunnel's construction methodology, for example, a main tunnel constructed using a TBM with precast concrete segment lining, and a cross passage constructed using a mining technique mechanically performed by means of picks or teeth.*

5.3 Space proofing

5.3.1 The designer should develop the section profile of the tunnel at the conceptual design stage with consideration given to:

a) space required to fulfil the functional requirements (see Clause **4**);
b) space requirements for safe construction and maintenance;
c) construction tolerance based on the assumed tunnel construction methodology;
d) survey tolerance;
e) end throw and centre throw when a curved tunnel is constructed using rigid straight sections of lining;
f) long-term deformation of the tunnel lining (ovalization – see Note to **5.3.2**); and
g) any project-specific space requirements.

NOTE 1 *BTS, Tunnel Lining Design Guide [NR1], Figure 2.1 provides major spatial considerations for tunnel linings for rail, road and utility tunnels.*

NOTE 2 *The construction tolerance of a tunnel can be affected by various independent elements. For example in TBM tunnelling, the TBM's driving tolerance links to the lining ring's positional tolerance, and the segment's erection tolerance can be independent from the TBM's driving tolerance.*

5.3.2 Where no project-specific tolerance for space proofing is specified by the client, the designer should determine the space-proofing tolerances in accordance with BTS, *Specification for Tunnelling,* Section 328 [NR2].

NOTE *The long-term deformation limit of a tunnel lining is sometimes defined in the client's design standard. It is often for the designer to provide guidance on the long-term deformation limit, based on historical deformation or structural/geotechnical limitation, particularly with inexperienced clients. The long-term deformation considers a distortion of the lining that can be caused by unknown future activity around the tunnel.*

5.3.3 Where there are no deformation limits specified by the client, the designer should determine the deformation limit in accordance with BTS, *Tunnel Lining Design Guide,* Section 5.8.4 [NR1].

5.3.4 The designer should discuss and agree in writing with the client the overall size of the tunnel, having considered all factors listed in **5.3.1**.

NOTE *The sizing of the tunnel section is one of the most critical design input parameters that directly affects the project's construction cost and programme, e.g. tunnel size influences lining thickness, TBM size, excavation volume and ground movement/settlement, ventilation and aerodynamics/hydraulics. Tunnel size determined using unrealistic assumptions and/or uncertain space requirement information is considered to be a critical project risk which could cause significant impact to the project's design programme and cost. The consequences of changing the tunnel size at a subsequent stage in the project increase as the project progresses. It is important to fix the size of the tunnel at the concept stage to minimize programme delay and cost risk.*

5.4 Feasibility options report

5.4.1 The necessity of a feasibility options report should be discussed and agreed between the client and the designer at the beginning of conceptual design stage (see **A.5.1** and **A.5.3**).

5.4.2 Where a feasibility options report is required, the designer should compile a feasibility options report that includes the options development background and associated decision-making history in the tunnel lining design, and reflects the project requirements.

NOTE 1 *The feasibility options report for tunnel lining design can be produced as part of the overall project options report, which provides information on elements such as the alignment options and stations layout options reports.*

NOTE 2 *It is advisable to include the following subjects in the feasibility options report:*

- *expected tunnel excavation methods, e.g. mined or TBM;*
- *suggested tunnel lining types, e.g. SCL, cast-in-situ or precast concrete segment;*
- *conceptual conclusion about meeting the ultimate and serviceability limit states under critical load conditions of the project;*
- *feasibility of construction methods; and*
- *any project-specific challenges that affect the conceptual decisions of the tunnel lining design.*

NOTE 3 *It is advisable to use a decision tree or flow diagram in the feasibility options report for the development of a preferred option.*

NOTE 4 *The feasibility options report can save time and costs when something changes in the next design stage. The designer and/or client can go back to the feasibility options report and find out why one option had been dismissed, minimising the risk of repetition.*

NOTE 5 *It is advisable that the feasibility options report is reviewed and signed off by the client during the conceptual design stage.*

NOTE 6 *Some clients have a combined documentation process in which the feasibility options report forms part of other documents, such as the approval in principle (AIP).*

5.5 Approval In Principle (AIP)

5.5.1 The necessity of an AIP document should be agreed in writing between the client and the designer at the beginning of conceptual design stage (see **A.5.1** and **A.5.3**).

5.5.2 Where an AIP is deemed necessary, the designer should produce an AIP for the selected tunnel options that provides the design concept, basis, criteria and assumptions to be used for the detailed design of the tunnel lining. The AIP should include:

a) tunnel lining structural design logic and procedure;
b) design assumptions;
c) ground model to be used (this might be preliminary depending on the status of the site investigation and testing information available);
d) tunnel lining structural analysis methods to be used;
e) design code/standard to be used for the design;
f) load combinations to be used;
g) section profile of the tunnel;
h) tunnel alignment; and
i) lining materials, grade and type, including reinforcements.

NOTE *The term concept design statement (CDS) is sometimes used instead of AIP. The purpose and contents of CDS are the same as the AIP.*

5.5.3 The AIP should be reviewed and approved in writing by the client.

5.5.4 The designer should use the AIP as a basis of design in the detailed design stage of the tunnel lining.

NOTE *The AIP can be used as part of the information to assist the transfer of design information from one stage to the other (or from one designer to the other at the same design stage). Information on managing the risk associated with the transfer of information between designers is given in BTS, Joint Code of Practice for Risk Management of Tunnel Works in the UK [8].*

6 Characterization of ground

6.1 General

Subclauses **6.2** and **6.3** should be the responsibility of either the designer, the client, or a third-party contractor employed by either, however this responsibility should be discussed by the designer and the client and agreed in writing.

NOTE 1 *A definition of the responsibility for the characterization of the ground is given in BS 6164:2011, Clause* ***5****.*

NOTE 2 *Clause* ***6*** *provides guidance on appropriate strategies and approaches to carrying out desk studies and ground investigations for tunnel lining design. In particular, focus is given to the ground and groundwater characteristics that need to be fully understood to design the lining and to appreciate risks relating to construction of the tunnel. Guidance is offered for deriving ground parameters for tunnel lining design. This is set in the context of the design approach given in BS EN 1997-1 and BS EN 1997-2, and the accompanying National Annexes (NA+A1:2014 to BS EN 1997-1:2004+A1:2013 and NA to BS EN 1997-2:2007).*

NOTE 3 *The BTS,* Tunnel Lining Design Guide *[NR1] provides a useful source of reference for many of the topics covered in Clause* ***6****.*

NOTE 4 *Guidance on the design of tunnel linings in hard rock conditions is given in Hoek and Brown,* Underground Excavations in Rock *[9]; Franklin and Dusseault,* Rock Engineering Applications *[10]; and Hudson and Harrison,* Engineering Rock Mechanics – An introduction to the Principles *[11].*

NOTE 5 *The use of GIS-based technology can be a useful tool to collate this geotechnical information and communicate to other project team members during the planning, design, construction and operational usages of the proposed tunnel.*

6.2 Desk study

6.2.1 A desk study collating the topography, geology, geomorphology, hydrology, hydrogeology and historical uses along the proposed tunnel route should be carried out, and the findings used to develop the ground model (see **6.2.3**).

NOTE 1 *The desk study is used to identify risks and gaps in available information, and identify areas where particular investigation is required over and above the investigations to provide design input values (see* ***6.3.1****).*

NOTE 2 *The desk study is of particular importance for urban tunnelling, where existing foundations and buried obstructions constitute key risks.*

NOTE 3 *Perry and West, Sources of Information for Site Investigations in Britain [12], and BS 6164, Clause* ***5*** *give detailed advice on sources of existing information.*

6.2.2 Issues that are a material consideration as part of a conventional planning application, such as archaeology and contamination, should be investigated and documented as part of a desk study and subsequent work.

6.2.3 A ground model should be produced from the results of the desk study to assist in guiding the objectives of any subsequent ground investigation.

NOTE 1 *The arisings and results from each exploratory hole can be compared against and used to update the ground model developed at the desk study stage. Any differences need to be investigated.*

NOTE 2 *Additional information on the ground model can be found in Muir Wood,* Tunnelling: Management by Design *[13].*

6.2.4 Site reconnaissance of the tunnel alignment should be carried out to provide an appreciation of the nature of the alignment, potential shaft and work-site locations. The findings should be included in a ground model (see **6.2.3**).

NOTE 1 *This can be supported by the use of recent aerial photography or satellite imagery and web-based applications such as online maps in the public domain.*

NOTE 2 *Walkover surveys also provide the opportunity to examine any exposure of the ground and to verify other sources of information acquired as part of the desk study.*

NOTE 3 *The desk study is used to identify the condition and proximity of existing buildings and infrastructure to the proposed alignment.*

6.3 In-situ ground investigation

6.3.1 Planning of ground investigations

6.3.1.1 In-situ ground investigations should be carried out in a phased manner to progressively understand and reduce the uncertainties and risks relating to the tunnelling scheme.

NOTE 1 *Guidance for planning an in-situ ground investigation is given in BS EN 1997-2:2007, Section* ***2****.*

NOTE 2 *Guidance is given in* ***6.3.2*** *to* ***6.3.6*** *for carrying out appropriate investigation to obtain a range of parameters that are particularly important for the tunnel lining design.*

6.3.1.2 When determining the spacing of in-situ ground investigations, the following factors should be reviewed:

a) knowledge of the ground conditions prior to carrying out the initial phase of investigation;
b) prevalence of surface infrastructure, e.g. whether tunnelling in urban setting;
c) location of shafts, cross passages, stations and portals;
d) variation of ground and groundwater conditions over the alignment of the tunnel;
e) potential presence of anomalous geological features such as scour hollows, solution features, etc.;
f) presence of man-made features such as landfills or mine workings;
g) balance between intrusive and geophysical testing methods;
h) prevalence of particular strata or deposits that present an elevated risk to tunnelling;
i) location, depth, diameter and spacing of tunnels;
j) faults, discontinuities, sand lenses or other geological features that might have localized high groundwater pressure; and
k) type and quality of sampling and in-situ testing proposed.

NOTE *Guidance on the spacing of in-situ ground investigations and the frequency of testing is given in BS EN 1997-2.*

6.3.1.3 In-situ ground investigations should be planned to reflect the requirements of the individual project.

6.3.2 Method of investigation and sampling

6.3.2.1 The method of investigation and sampling should be selected to suit the ground conditions and the requirements of the individual project.

NOTE 1 *Clayton et al [14] provide an overview of exploratory techniques commonly used as part of in-situ ground investigations.*

NOTE 2 *Appropriate guidance on taking samples can be found in BS EN 1997-2:2007, Section* ***3****. This offers guidance on the quality of sampling necessary to perform the typical range of ground testing used to acquire ground parameters.*

NOTE 3 An overview *of the applicability of in-situ ground investigation methods for investigating different ground conditions and acquiring a range of ground properties can be found in BS EN 1997-2:2007, Table 2.1.*

NOTE 4 *An overview of the range of laboratory tests that are commonly carried out to measure specific ground properties can be found in BS EN 1997-2:2007, Table 2.3.*

6.3.2.2 Soil and rock description should be carried out in accordance with BS EN ISO 14688-1, BS EN ISO 14688-2 and BS EN ISO 14689-1.

NOTE *Appropriate classification of soil and rock is of critical importance for appreciating risks relating to the construction and design.*

6.3.3 Ground chemistry considerations with respect to concrete and other material durability

6.3.3.1 As part of the in-situ ground investigation, ground and groundwater testing should be carried out in accordance with BS 8500-1 and BS 8500-2 to characterize the constituents of the ground in order to select a concrete mix for the tunnel lining design.

6.3.3.2 The ground chemistry and potential for oxidization should also be assessed and documented as part of the design process.

NOTE 1 *If there is potential for the exposed ground to oxidize, this can result in an oxygen-deficient environment and can present a risk to tunnellers working within confined or unventilated spaces.*

NOTE 2 *Of particular interest is understanding the requirement for sulfate resistance in the concrete mix and whether other naturally-occurring minerals or historical contaminants in the ground may present a risk to the performance of the tunnel lining.*

6.3.4 Coefficient of earth pressure at rest, K_0

The methods used to determine the in-situ pressure prior to tunnelling should be compared with regional stress information from available structural geological mapping.

NOTE *An important input parameter to establish is the coefficient of earth pressure at rest. The coefficient of earth pressure prior to tunnelling, K_0, can be established by a number of laboratory and field techniques. The most commonly used tests are by pressuremeter testing (of which self-boring pressuremeter testing is usually preferred on the basis of minimized disturbance) and carrying out suction measurements of the soil. For soft rocks, hydraulic fracturing is also commonly used. In addition, there are various analytical-based methods by which K_0 can be derived. These include using empirical methods such as those proposed by Mayne and Kulhawy [15] or from soil models such as BRICK proposed by Simpson [16]. The action of constructing the tunnel, however, significantly modifies the in-situ stress in the ground (see* ***11.7.2.3****).*

6.3.5 Groundwater pressure and permeability

The selection of the instrumentation to monitor groundwater pressure should be based on the permeability of the ground. Consideration should be given as to whether the groundwater pressures are beneficial or detrimental to the aspect of the tunnel lining design being considered.

NOTE 1 *The permeability of the ground influences the rate at which excess pore pressures in the ground dissipate during and following construction and whether short- or long-term parameters govern ground behaviour.*

NOTE 2 *Some groundwater monitoring installations can also be used to establish the permeability of the ground. Guidance on the range of installations and carrying out groundwater monitoring and permeability testing are given in BS EN 1997-2 and BS EN ISO 22475-1.*

6.3.6 Ground stiffness

In-situ ground investigations and laboratory testing should be carried out to measure ground stiffness either directly or indirectly.

NOTE *For both direct and indirect methods, the measured stiffness can be influenced by the ground disturbance that has occurred prior to testing. For indirect measures it is important to understand the basis of the correlation being used and to check that it is appropriate for the ground strain level, ground stress and direction of loading likely to be experienced when forming the tunnel. The testing can also be designed to inform strength and stiffness calibration for constitutive models.*

6.4 Reporting

6.4.1 General

NOTE 1 *Reporting of geotechnical data is described in BS EN 1997-1:2004+A1:2013, Sections* ***2*** *and* ***3****. This describes two types of geotechnical reports, namely ground investigation reports (GIRs) and geotechnical design reports (GDRs). Further to this, the use of geotechnical baseline reports (GBRs) can be used as part of contract documents.*

NOTE 2 *At project inception, it is important that the definitions and content of these reports are defined by the client or client's advisor. For instance, the term GIR has historically been used to refer to the geotechnical interpretative report. The content of these reports traditionally covered some of the scope of the GDR under Eurocode terminology. Historically the terms geotechnical factual report or geotechnical data report have also been used to describe some of the content covered by the GIR under Eurocode terminology.*

6.4.2 Ground investigation report (GIR)

6.4.2.1 A GIR should be produced and provided to the client by the designer, or a third-party contractor employed by either the designer or the client. The GIR should include:

a) a presentation of all available geotechnical information, including geological features and relevant data; and

b) a geotechnical evaluation of the information, stating the assumptions made in the interpretation of the test results.

NOTE *A GIR can be produced by either a ground investigation contractor or geotechnical consultant, who might be part of the designer's organization. Consideration needs to be given as to who is responsible for* ***6.4.2.1 a)*** *and* ***6.4.2.1 b)****. It is recommended that the tasks outlined in* ***6.4.2.1 b)*** *are carried out by the tunnel designer.*

6.4.2.2 The designer should base the design of the tunnel lining on the GIR.

6.4.3 Geotechnical design report (GDR)

6.4.3.1 A GDR should be produced and provided to the client by the designer. The GDR should include:

a) the assumptions, data, methods of calculation and results of the verification of safety and serviceability;

b) a description of the site and surroundings;

c) a description of the ground conditions and ground-borne risks;

d) a description of the proposed construction, including actions;

e) design values of soil and rock properties, including justification, as appropriate;

f) statements on the codes and standards applied;

g) statements on the suitability of the site with respect to the proposed construction and the level of acceptable risk;

h) design calculations and drawings;

i) design recommendations; and

j) a note of items to be checked during construction or requiring maintenance or monitoring.

NOTE 1 *Where agreed between the client and the designer, alternative suitable design documentation other than a GDR can be provided.*

NOTE 2 *The GDR is typically produced by a ground investigation contractor or geotechnical consultant responsible for the design of the tunnel.*

6.4.3.2 The designer should make reference to the content of the GIR when designing the tunnel lining.

6.4.3.3 The GDR should make reference to the GIR and any other relevant documentation, such as those that provide the basis for the proposed design parameters.

6.4.4 Geotechnical baseline report (GBR)

NOTE 1 *The GBR's primary purpose is to establish a definitive statement of the geotechnical conditions ahead of tunnel construction, as a baseline for contractual reference, if subsequently required. The contractual framework to be adopted for construction needs to reflect the client's approach to and acceptance of risk, the consequences of which are expected to be advised by an experienced tunnelling engineer. Usually, risks associated with conditions consistent with or less adverse than the baseline are allocated to the contractor, and the client accepts responsibility for those risks significantly more adverse than the baseline. Essex [17] discusses the subject of risk allocation in detail.*

NOTE 2 *The GBR is not to be used as a basis for design and consequently is not to be included in either "works information" or "site information" under NEC contracts. The GBR provides contract information.*

6.4.4.1 A GBR should be produced and provided to the client by either the designer, the client themselves, or a third-party contractor employed by either the designer or the client.

6.4.4.2 The designer should not base the design of the tunnel lining on the GBR.

6.5 Digital data

6.5.1 The designer should produce digital data on the in-situ ground investigations and provide this to the client.

NOTE 1 *The Association of Geotechnical Specialists (AGS) guidance documentation defines the format for the data transfer protocol. See http://ags.org.uk.*

NOTE 2 *The use of digital data can significantly speed up the transfer of data between project participants and the provision of such data can accelerate the development of ground models and the interpretation of the geotechnical data. This has significant benefits in both supporting the design process and enabling the quick communication of information at all stages of the project between the client, designer and contractor. The use of digital data also reduces the risk of transcript errors propagating into the design process.*

NOTE 3 *It is recommended that this format is used throughout the in-situ ground investigation design and construction process.*

6.5.2 The client and designer should each have procedures and systems in place to manage the volume and type of data.

NOTE *It is advisable that where a third-party contractor is used, the client or designer checks that the third-party contractor has procedures and systems in place to manage the volume and type of data.*

6.6 Derivation of design parameters

6.6.1 General

NOTE *The parameters required for design depend on the analysis proposed to carry out the tunnel lining design. Closed-form analyses require relatively few ground parameters, while numerical analyses incorporating complex constitutive models require many additional ground parameters.*

6.6.1.1 The designer should identify and document the construction sequence for derivation of design parameters.

6.6.1.2 The designer should identify and document the ground and drainage conditions along the tunnel alignment.

NOTE *These conditions can change over the different phases of construction and therefore multiple design stages might require input parameters and regular analysis.*

6.6.2 Characteristic value

NOTE 1 *The zone of ground governing the behaviour of a tunnel structure at a limit state is much larger than a test sample or the zone of ground affected in an in-situ test. Consequently the value of the governing parameter often requires careful consideration of a range of values covering a large surface or volume of the ground.*

NOTE 2 *Geotechnical test results can exhibit considerable scatter compared with the manufactured materials. This is caused by a number of factors including the ground macro- and micro-fabric and disturbance of the ground in sampling or carrying out the in-situ ground investigations.*

NOTE 3 *Examples of selecting characteristic ground are provided in Simpson and Driscoll,* Eurocode 7 – A commentary *[18].*

6.6.2.1 The designer should select the ground and groundwater parameters in accordance with BS EN 1997-1:2004+A1:2013, **3.3**.

NOTE *BS EN 1997-1:2004+A1:2013,* ***2.4.5.2*** *provides the principles for selecting characteristic values of geotechnical parameters for use in design.*

6.6.2.2 The designer should select characteristic values for geotechnical parameters based on results and derived values from laboratory tests and in-situ ground investigations (see **6.3**)

6.6.2.3 The designer should select characteristic values of a geotechnical parameter as a cautious estimate of the value affecting the occurrence of the limit state.

6.6.2.4 With respect to the macro structure of the ground, the designer should consider scale effects when selecting parameters for tunnel lining design.

NOTE 1 *Examples of the macro structure of the ground are jointing, lamination and fissuring.*

NOTE 2 *These might not be identified from laboratory or in-situ ground investigations and might only be properly appraised by acquiring sufficiently high-quality samples and carrying out appropriate geotechnical logging of these.*

6.6.2.5 Where statistical methods are employed in the selection of characteristic values for ground properties, the designer should select a method that:

a) differentiates between local and regional sampling; and

b) accommodates the use of experience of comparable ground properties.

NOTE *For instance, statistical studies might have already been carried out to consider the variability of a material such as London clay that could be relevant to a particular tunnel project.*

6.6.2.6 Where statistical methods are used, the designer should derive the characteristic values such that the calculated probability of a worse value governing the occurrence of the limit state under consideration is not greater than 5%.

6.6.2.7 When undertaking a back analysis of observed behaviour, the designer should initially use best estimate, rather than characteristic parameters, to back calculate observed behaviour.

6.6.3 Observational methods

The designer should determine alternative ground and groundwater parameters from characteristic ones if an observational approach to design is adopted. Where an observational approach is adopted, the designer should conform to the principles set out in *CIRIA 185* [NR3].

NOTE 1 *The formation of tunnels using sprayed concrete lining methods is sometimes carried out in an observational manner. While the sprayed concrete lined tunnel support system might be fully designed to cater for a range of ground conditions, the use of a range of toolbox measures can be introduced based on observed behaviour. Under such circumstances, the design of the tunnel lining can accommodate parameters other than characteristic parameters, provided there is a robust system and toolbox measures in place to introduce mitigations in a rapid manner to avoid displacements of the ground and lining exceeding pre-defined tolerable limits. BS EN 1997-1:2004+A1:2013,* ***2.7*** *identifies the precautions that need to be in place if executing works using the observational method.*

NOTE 2 *These methods are not commonly used in combination with precast tunnel lining segments.*

7 Materials design and specification

***NOTE** Under the Construction Products Regulations (CPR), harmonized technical specifications are either harmonized European product standards (hENs) established by CEN/CENELEC3 or European Assessment Documents produced by the European Organisation for Technical Assessment (EOTA). The harmonized technical specification for a product defines EEA-wide methods of assessing and declaring all the performance characteristics required by regulations in any Member State which affect the ability of construction products to meet seven basic requirements for construction works. They are:*

a) mechanical resistance and stability;

b) safety in case of fire;

c) hygiene, health and environment;

d) safety and accessibility in use;

e) protection against noise;

f) energy economy and heat retention; and

g) sustainable use of natural resources.

7.1 Concrete

Precast concrete should conform to BS EN 13369.

***NOTE** Durability recommendations in BS EN 13369 differ from those in BS 8500-1. See also **7.9**.*

7.2 Cements and combinations

***NOTE 1** A list of cement and combination types is given in BS 8500-1:2015, Table A.6.*

***NOTE 2** Not all the cements or all the combinations in BS 8500-1:2015, Table A.6 are suitable for use in tunnel linings in all exposure conditions. Cements or combination types other than those in BS 8500-1:2015, Table A.6 might be suitable for use in tunnel linings in particular exposure conditions.*

When selecting cement or combination type, the designer should review durability recommendations and select the most appropriate cement or combination type for the project (see **7.9**).

7.3 Additions

7.3.1 General

***NOTE** An addition can be either a type I addition, defined as nearly inert, or a type II addition, defined as pozzolanic or latent hydraulic. Some additions can be considered as part of the cementitious materials content as described in **7.3.4**.*

7.3.2 Type I additions

7.3.2.1 Filler aggregate should conform to BS EN 12620 or BS EN 13055-1.

7.3.2.2 Limestone fines should conform to BS 7979.

7.3.3 Type II additions

7.3.3.1 Fly ash should conform to BS EN 450-1.

7.3.3.2 Silica fume should conform to BS EN 13263-1.

7.3.3.3 Ground granulated blastfurnace slag should conform to BS EN 15167-1.

***NOTE** Other type II additions, such as metakaolin, might be suitable for use in tunnel linings in particular exposure conditions.*

7.3.4 Use of additions

7.3.4.1 The use of silica fume as a type II addition should conform to BS EN 206:2013, **5.2.5.2.3**.

***NOTE** Fly ash, ground granulated blastfurnace slag and limestone fines can be taken fully into account in the concrete composition in respect of cement content and water-to-cement ratio. See BS 8500-2: 2015, **4.4**.*

7.4 Aggregates

7.4.1 Aggregates should conform to BS EN 12620 and BS 8500-2:2015, **4.3**.

***NOTE** Guidance on the use of BS EN 12620 is given in BS PD 6682-1.*

7.4.2 Lightweight aggregates should conform to BS EN 13055-1 and BS 8500-2:2015, **4.3**.

***NOTE** Guidance on the use of BS EN 13055-1 is given in BS PD 6682-4.*

7.5 Water

Mixing water and water used for curing should conform to BS EN 1008.

7.6 Admixtures

Admixtures should conform to BS EN 934-2.

7.7 Reinforcement

7.7.1 Bar

7.7.1.1 Carbon steel reinforcement should conform to BS 4449.

7.7.1.2 Stainless steel reinforcement should conform to BS 6744.

7.7.2 Fibre

7.7.2.1 Steel fibres should conform to BS EN 14889-1, BS ISO 13270 or a European Technical Approval.

7.7.2.2 Polymer fibres should conform to with BS EN 14889-2 or a European Technical Approval.

NOTE *Guidance on fibre properties is given in BTS,* Specification for Tunnelling *2010, 203.3 [NR2].*

7.8 Exposure classes related to environmental actions

7.8.1 The designer should assess the applicability of general exposure classes given in BS 8500-1:2015, Table A.1 and Table A.2 to specific exposure conditions existing in tunnels.

NOTE *Specific exposure conditions include elevated carbon dioxide and temperature levels in highly-trafficked road tunnels.*

7.8.2 Where the general exposure classes given in BS 8500-1:2015, Table A.1 and Table A.2 as not applicable to the specific exposure conditions, the designer should assess the applicability of the durability guidance in BS 8500-1 (see **7.9.1.4**).

7.8.3 Where the durability guidance in BS 8500-1 is assessed as not applicable to the specific exposure conditions, the designer should assess the need for alternative measures.

7.8.4 The designer should assess the following factors when determining the exposure conditions:

a) concrete in tunnel linings might be exposed to more than one type of exposure condition;

   NOTE *The exposure conditions to which the concrete is subjected can be expressed as a combination of the exposure classes given in BS 8500-1:2015, Table A.1 and Table A.2.*

b) different surfaces of tunnel linings are likely to be subject to different exposure conditions;

c) different parts of a tunnel might be subject to different exposure conditions or severity of exposure;

   NOTE *For example, near portals the temperature variation, moisture conditions and carbon dioxide concentration might be different from those deeper within the tunnel.*

d) tunnel linings where one surface is in contact with water containing chloride and another is exposed to air are potentially in a more severe exposure condition than described by exposure class XD2 or XS2 in BS 8500-1:2015, Table A.1, see **7.9.2**; and

e) exposure conditions can change over the design working life of the tunnel linings.

7.8.5 Where relevant, the designer should document the findings of the assessments undertaken in **7.8.1** to **7.8.4**.

7.9 Durability

7.9.1 General

7.9.1.1 The designer should design the tunnel lining in accordance with BS EN 1990:2002+A1:2005, **2.4**, such that deterioration over the design working life does not impair the performance of the structure below that required.

NOTE *Specialist advice might be required.*

7.9.1.2 The designer should assess and document the:

a) intended or foreseeable use of the structure;
b) required design criteria;
c) expected exposure conditions;
d) composition, properties and performance of the materials and products;
e) properties of the ground;
f) choice of the structural system;
g) shape of members and the structural detailing;
h) quality of workmanship, and the level of control;
i) particular protective measures; and
j) intended maintenance during the design working life.

7.9.1.3 The designer should assess and document the anticipated level of maintenance (see **4.3.4** and **4.3.5**) and exposure conditions (see **7.8**) based on the document produced in **7.9.1.2**.

7.9.1.4 The designer should assess and document whether the recommendations given in BS 8500-1:2015, Table A.4 and Table A.5 need to be enhanced for the particular conditions of the tunnel under design.

7.9.2 Resisting corrosion of reinforcement in concrete

7.9.2.1 General

The designer should design the tunnel lining so as to prevent unacceptable levels of deterioration due to corrosion of reinforcement over the design working life.

*COMMENTARY ON **7.9.2.1***

Corrosion of carbon steel reinforcement can result from carbonation of the concrete cover or from ingress of chloride from the surroundings.

Durability recommendations to resist corrosion of reinforcement in concrete are given in BS 8500-1:2015, Table A.4 and Table A.5. For a given quality of concrete, increasing concrete cover can result in increased protection against corrosion. Increased concrete cover can, however, result in increased thickness of the lining and a larger excavation.

Durability recommendations to resist corrosion of reinforcement in concrete in BS 8500-1:2015 do not make any distinction between in-situ and precast concrete elements. BS EN 13369:2013, Annex A gives recommendations for concrete cover to resist corrosion of reinforcement for precast concrete elements made in accordance with that standard. The recommendations in BS EN 13369:2013 and BS 8500-1:2015 differ significantly in some circumstances with BS 8500-1:2015 recommendations generally being more rigorous.

The recommendations in BS 8500-1:2015, Table A.4 and Table A.5 can result in cover to reinforcement that is too large for some tunnel lining applications. Additional methods of protection, such as corrosion-resistant reinforcement, surface protection, special admixtures or cathodic protection, might reduce the cover required for protection of reinforcement against corrosion.

*Recommended crack width limits for reinforced concrete in different exposure classes are given in BS EN 1992-1-1:2004+A1:2014, **7.3.1**.*

*For steel fibre reinforced concrete (SFRC), minimum concrete cover recommendations only apply to the embedded bar reinforcement, not to the steel fibres. Carbon steel fibres can corrode when passivity is lost due to carbonation of the surrounding concrete or due to ingress of chloride in a similar way to normal reinforcement as described in **7.9.2.2** and **7.9.2.3**. Predictive models can be used to determine the required properties of concrete, or the need for additional methods of protection, to restrict the extent of corrosion of fibres such that it does not adversely affect the performance of the lining over the design working life.*

Corrosion of carbon steel fibres close to the surface can cause rust stains.

7.9.2.2 Carbonation-induced corrosion of reinforcement

The designer should select a combination of cover to reinforcement and limiting values of concrete composition and properties, such that damaging carbonation-induced corrosion of reinforcement does not occur during the design working life. Additional protection should be included, if required.

*COMMENTARY ON **7.9.2.2***

The reaction of atmospheric carbon dioxide with concrete results in a reduction in the alkalinity of the concrete. If the carbonation reaches the reinforcement it can break down the passive oxide layer on carbon steel and result in corrosion if moisture is present. The carbonation process is progressive, but normally slow.

Guidance on combinations of concrete quality and cover to reinforcement to resist carbonation-induced corrosion of reinforcement is given in BS EN 13369:2013, Annex A and BS 8500-1:2015, Table A.4 and Table A.5. The recommendations in BS 8500-1:2015 are generally more rigorous.

Levels of carbon dioxide in tunnels, especially heavily-trafficked road tunnels, can be higher than normal atmospheric concentrations and can result in higher rates of carbonation of concrete than in normal atmospheric exposure, especially at higher than normal ambient temperatures. Durability recommendations given in BS 8500-1:2015, Table A.4 and Table A.5 for carbonation-induced corrosion exposure conditions are based on normal UK atmospheric carbon dioxide concentration and temperature.

***NOTE** Guidance on additional methods of protection which might allow reduction in the required cover to provide protection against corrosion of reinforcement is given in* Enhancing reinforced concrete durability, Concrete Society Technical Report 61 *[19].*

7.9.2.3 Chloride-induced corrosion of reinforcement

The designer should select a combination of cover to reinforcement and limiting values of concrete composition and properties of concrete, such that damaging chloride-induced corrosion of reinforcement

does not occur during the design working life. Additional protection should be included, if required.

*COMMENTARY ON **7.9.2.3***

Additional protection might be required if the combination of concrete and cover are unable to provide the required performance

Water-borne chloride (e.g. saline groundwater or run-off containing de-icing salts) coming into contact with a concrete surface can result in build-up of chloride at the reinforcement to a level where corrosion of steel reinforcement is initiated.

Guidance on combinations of concrete quality and cover to reinforcement to resist chloride-induced corrosion of reinforcement is given in BS EN 13369:2013, Annex A and BS 8500-1:2015, Table A.4 and Table A.5. The recommendations in BS 8500-1:2015 are generally more rigorous.

Footnote C to BS 8500-1:2015, Table A.1 identifies where one surface is immersed in water containing chloride and another is exposed to air, elements are potentially in a more severe exposure condition than described by exposure class XD2 or XS2 in BS 8500-1:2015, Table A.1, especially where the dry side is at a high ambient temperature. Evaporation of chloride-containing water on the dry side can result in high concentration of chloride within the concrete even where the level of chloride in the water is low.

Guidance on additional methods of protection which might allow reduction in the required cover to provide protection against corrosion of reinforcement is given in Enhancing reinforced concrete durability, Concrete Society Technical Report 61 *[19].*

7.9.3 Resisting chemical attack

7.9.3.1 The designer should assess and document the risk of potential chemical attack from groundwater, including seepage, and other possible sources such as effluent and road drainage, including fluids conveyed within the tunnel.

7.9.3.2 The designer should use the findings of the analysis undertaken in **7.9.3.1** when designing the tunnel lining.

*COMMENTARY ON **7.9.3.2***

External surfaces of tunnel linings can be subject to high hydrostatic pressure which can result in increased rates of penetration of aggressive chemicals.

Recommendations for concrete properties, limiting values of composition and additional protective measures (APM) for in-situ concrete elements to resist chemical attack are given in BS 8500-1:2015, A.4.5. Guidance on resisting attack from some aggressive chemicals not included within BS 8500-1:2015, A.4.5 can be found in BRE Special Digest 1 [20], Concrete in aggressive ground.

Recommendations for durability for external surfaces of precast segmental linings for water and sewer services, storage and transportation, and for internal surfaces where protective lining is not necessary, are given in Table 3. Table 4 gives details of the limiting values associated with the specification of the DC-class. Recommendations for where protective lining is necessary for durability of internal surfaces of precast segmental linings for water and sewer services, storage and transportation, are given in Table 6. Where a protective lining with adequate chemical resistance is provided on the internal surface it is not necessary to consider the recommendations in Table 3 for the internal surface.

Recommendations in Table 3 and Table 6 are based on BRE Special Digest 1 [20], Concrete in aggressive ground, *where further details can be found.*

7.9.4 Resisting freeze-thaw attack of concrete

The designer should assess and document the likelihood of the tunnel lining being subjected to freezing and thawing cycles whilst wet. Where the designer deems the likelihood to be high, the tunnel lining should be designed to resist freeze-thaw attack.

NOTE *Recommendations to resist freeze-thaw attack are given in BS 8500-1:2015, Table A.9. Freeze-thaw attack can also be resisted by provision of surface protection that prevents the concrete surface becoming saturated.*

Table 3 – Recommendations for durability against chemical attack for the external and internal surface of precast segmental linings where protective lining is not necessary [A)]

ACEC Class [B)]	Design working life	
	50 years	100 years
AC-1	DC-1	DC-1
AC-2z	DC-2z	DC-2z
AC-2	DC-2	DC-2
AC-3z	DC-3z	DC-3z
AC-3	DC-3 [C)]	DC-3 [C)] + one APM [D)] of choice
AC-4z	DC-4z	DC-4z
AC-4	DC-4 [C)]	DC-4 [C)] + one APM [D)] of choice
AC-4m	DC-4m [C)]	DC-4m [C)] + one APM [D)] of choice
AC-5z	DC-4z + APM [D)] 3	DC-4z + APM [D)] 3
AC-5	DC-4 + APM [D)] 3	DC-4 + APM [D)] 3
AC-5m	DC-4m + APM [D)] 3	DC-4m + APM [D)] 3

[A)] Applicable to both natural and brownfield sites, and for internally carried water and effluent not requiring protective lining in accordance with recommendations in Table 6.

[B)] Aggressive Chemical Environment for Concrete exposure class, in accordance with BS 8500-1:2015, Table A.2.

[C)] A DC (Design Chemical) Class one step lower or reduction of one APM can be applied by the designer to this indicated category if surface carbonation is assured (10 days minimum time to be allowed by the manufacturer before dispatch). No reduction is permitted for categories where this indication is not present.

[D)] APM, see Table 5.

Table 4 – Limiting values of composition and properties for concrete where a DC-class is specified

Design Chemical Class	Max. w/c ratio	Minimum cement or combination content (kg/m³) for maximum aggregate size of:			Cement or combination types
		20 mm	14 mm	10 mm	
DC-1					All in BS 8500-2: 2015, Table 1
DC-2	0.55	300	340	360	II/B-V+SR [A], IIIA+SR [B], IV/B-V, III/B+SR [B]
	0.50	320	360	380	CEM I, II/A-D, II/A-S, II/B-S, II/A-V, II/B-V [C], IIIA [D], IIIB [D], CEM I-SR0, CEM I-SR3
	0.45	340	380	380	II/A-L 32.5, II/A-LL 32.5
	0.40	360	380	380	II/A-L 42.5, II/A-LL 42.5
DC-2z	0.55	320	340	360	All in BS 8500-2: 2015, Table 1
DC-3	0.50	340	360	380	III/B+SR [B]
	0.45	360	380	380	IV/B-V
	0.40	380	380	380	II/B-V+SR [A], IIIA+SR [B], CEM I-SR0, CEM I-SR3
DC-3z	0.50	340	360	380	All in BS 8500-2: 2015, Table 1
DC-4	0.45	360	380	380	III/B+SR [B]
	0.40	380	380	380	IV/B-V
	0.35	380	380	380	II/B-V+SR [A], IIIA+SR [B], CEM I-SR0, CEM I-SR3
	0.40	400	400	400	II/B-V+SR [A], IIIA+SR [B]
DC-4z	0.45	360	380	380	All in BS 8500-2: 2015, Table 1
DC-4m	0.45	360	380	380	III/B+SR [B]

[A] 25-35% fly ash

[B] Where the alumina content of the slag is not greater than 14% and/or the C_3A content of the Portland cement (CEM I) fraction is not greater than 10%

[C] 21-24% fly ash

[D] Where the alumina content of the slag is greater than 14% and the C_3A content of the Portland cement (CEM I) fraction is greater than 10%

Table 5 – Additional protective measures (APMs)

Option code	APM [A)]
APM1	Enhanced concrete quality
APM2	Use of controlled permeability formwork
APM3	Provide surface protection
APM4	Provide sacrificial layer
APM5	Address drainage of site [B)]

[A)] Further details of APMs are given in BRE Special Digest 1 [20], *Concrete in aggressive ground*.

[B)] This APM might not be possible in many tunnel situations.

Table 6 – Recommendations for circumstances in which internal lining is necessary for precast concrete segmental linings for tunnels and shafts used for water and sewer [A)] services, storage and transportation

Type of water or effluent	pH	Aggressive carbon dioxide level of water or effluent (mg/l)	Protective lining
Natural water or domestic sewage	> 5.0	< 15	Lining not needed
		> 15	Provide lining
	< 5.0	< 15	Lining not needed unless sulfate level of water or effluent is more than 1 400 mg/l SO_4
		> 15	Provide lining
Industrial, including contaminated groundwater and run-off from vehicles	> 5.0		Lining not needed unless sulfate level of water or effluent is more than 1 400 mg/l SO_4
	< 5.0		Provide lining

[A)] Under certain conditions, sulfuric acid can be generated by bacterial action on sewage and protective lining could be needed. In this case, it is advisable that a project-specific durability assessment is undertaken and specialist advice is sought.

8 Material characterization and testing

8.1 General principles

*COMMENTARY ON **8.1***

The use of fibre reinforcement has become prevalent in all types of concrete tunnel lining, although fibre reinforced concrete (FRC) is not covered by either BS EN 1990:2002+A1:2005 or BS EN 1992-1-1:2004+A1:2014. A complementary methodology to BS EN 1992-1-1 is available from RILEM [NR4] and more recently fib (Fédération internationale du béton) has published its fib Model Code for Concrete Structures 2010 *[NR5], which includes limit state design methodologies for FRC.*

The *structural design of FRC elements is based on the post-cracking residual strength provided by fibre reinforcement. Bending tests are carried out to determine the load-deflection relationship and from which the necessary tensile stress-crack width relationship can be derived. Both the RILEM and fib design methodologies are based on a three-point bending test on a notched beam conforming to BS EN 14651.*

The *RILEM and fib design methodologies were respectively developed exclusively for SFRC and "based most of all on experience with SFRC". BS EN 14651 is based on the complementary test method developed by RILEM for metallic FRCs, although the principles of the test method can also be used to characterize the residual strength performance of macro-synthetic (MS)FRC. Nonetheless, the fib methodology does not cover "fibre materials with a Young's modulus which is significantly affected by time and/or thermo-hygrometrical phenomena", and the design methodologies are therefore limited with respect to (MS)FRC. Concrete Society Technical Report 63, Guidance for the design of steel-fibre-reinforced concrete, [21] provides outline guidance with respect to the extension of the RILEM methodology to the design of precast concrete segmental linings and Concrete Society Technical Report 65 [22],* Guidance on the use of macro-synthetic-fibre-reinforced concrete, *further extends this guidance to MSFRC.*

8.1.1 The designer should design concrete tunnel linings to conform with the requirements of BS EN 1990, BS EN 1992-1-1 and the NA to BS EN 1992-1-1, and conformance testing should be consistent with these principles.

***NOTE** BS EN 1990 establishes the principles of limit state design.*

8.1.2 Where FRC is employed for concrete segmental lining, the designer should base the design on either the *RILEM σ-ε methodology* [NR4], or the *fib Model Code for Concrete Structures 2010* [NR5], or design assisted by testing (see BS EN 1990). The chosen methodology should be documented, and where none of these procedures is adopted, the reasons for this choice should also be recorded.

8.1.3 The designer should base the determination of the material parameters necessary for the design on characteristic values. The material parameter characterization should be consistent with the methodology selected in **8.1.2** and be in a manner which is consistent with the adopted limit state design approach.

8.1.4 Conformance with the relevant plain concrete material parameters should be in accordance with BS 8500-1 and BS 8500-2.

***NOTE** The specification of the relevant plain concrete is covered in Clause **7**.*

8.1.5 Conformance requirements for FRC should be in accordance with the principles of limit state design, and should use test methods that are consistent with those which underpin the design methodology.

***NOTE** Conformity testing of FRC is not covered by the RILEM or fib methodologies.*

8.1.6 When determining FRC material parameter values for use in conceptual or preliminary design, the designer should make reference to data available from fibre manufacturers in the first instance, and where held, to historic data relating to concrete with similar material parameters to those of the proposed design.

NOTE 1 *The key characteristic values of FRC material parameters might have to be assumed during conceptual or preliminary design stages. FRC residual strength parameters are dependent on the type and dosage of fibre in combination with both the strength grade and other properties of the base concrete.*

NOTE 2 *An estimation of flexural tensile parameters of SFRC for different fibre dosages is given in* Post-cracking behaviour of steel fibre reinforced concrete *[23]. This can be useful where no prior data exists.*

8.1.7 When specifying conformance testing, the designer should cover both the preconstruction trial conformance and production conformance of those material parameter values assumed in the design.

8.1.8 When compiling the specification (see **8.1.7**), the designer should identify, in principle, the actions to be taken in the event of non-conformance.

8.1.9 Where the assumed characteristic values for FRC material parameters cannot be confirmed by preconstruction testing, the designer should review the design, and any changes should be documented and the preconstruction testing repeated.

8.2 Concrete characterization

8.2.1 As a minimum, concrete should be characterized by strength class and durability requirements in terms of the limiting values of composition, and these parameters specified in accordance with the "basic requirements" of BS 8500-1.

NOTE *Strength class specified in accordance with the "basic requirements" of BS 8500-1 relates to the requirement at 28 days. The "basic requirements" in BS 8500-1 might be inadequate depending on the production method, in which case "additional requirements", such as those for strength development, can also be included in the specification as provided for in BS 8500-1.*

8.2.2 Where "additional requirements" are specified by the designer, these should include appropriate performance requirements, test methods and conformance criteria.

8.2.3 The designer should assess and document the likely long-term concrete strength and its effect on the properties of the FRC. Where the long-term concrete strength is likely to exceed the specified 28-day strength, the designer should ensure that the values of the FRC material parameters used in the design are achieved in practice.

NOTE 1 *The RILEM design methodology is applicable to SFRC with strength grades up to C50/60. The fib methodology does not state a strength grade limit but does state that for ultra-high performance FRC additional rules can apply. It is likely that the 28-day strength in some applications exceeds that required for adequate structural performance.*

NOTE 2 *Segmental linings might require significant early age strength development to suit the logistics of the production processes. These requirements can have a significant effect on the long-term strength of the concrete such that the strength required to demonstrate 28-day compliance might not be representative of the long-term strength.*

8.2.4 The post-crack performance of FRCs may reduce with aging. The designer should therefore assess and document the likely effect of this on the lining's long-term performance.

8.2.5 Where FRC is employed for concrete segmental lining (see **8.1.2**), either as the only reinforcement or in combination with bar reinforcement, it should be characterized in terms of:

a) strength class (see **8.2.1**); and

b) the limit of proportionality and residual flexural tensile strengths as defined in BS EN 14651.

8.2.6 The limit of proportionality and residual flexural tensile strengths of FRC designed using alternative limit state design methodologies should be characterized in terms of standardized test methods that are consistent with the design method.

8.3 Preconstruction and production testing of concrete materials

8.3.1 The designer should specify the testing required to demonstrate that the concrete conforms to the requirements of the design

8.3.2 Where segmental tunnel linings incorporate fibre reinforcement of any type, the designer should specify preconstruction trials to demonstrate that the FRC performance parameters used in the design are realized in practice when using the concrete, fibre type and dosage proposed for the works.

8.3.3 When undertaking preconstruction trials for all FRCs, the contractor should develop a production methodology that can be demonstrated to achieve conformity with all the requirements of the project-specific specification.

8.3.4 The methodology developed by the contractor in **8.3.3** should be documented in the form of quality procedures which assure that the conformance achieved in the preconstruction trials can also be achieved in the works.

8.3.5 The production of all FRCs should conform to the quality assurance procedures developed by the contractor during the preconstruction trials.

8.3.6 The contractor should undertake production testing of FRC beams in a manner that is consistent with the standard test methods that underpin the relevant design methodology.

NOTE *If the quality assurance procedures developed during the preconstruction trials are sufficient to ensure that the in-situ fibre content and concrete strength grade are compliant, it might not be necessary to conduct beam tests.*

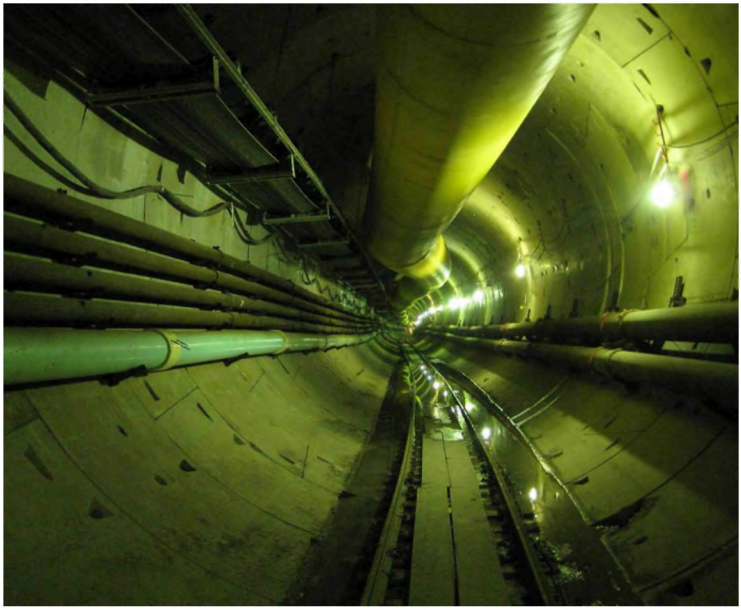

9 Limit state design

9.1 Design approach

NOTE *BS EN 1990:2002+A1:2005, Section **3** defines the principles of limit state design. The tunnel lining is normally considered in terms of ultimate limit state and serviceability limit state.*

9.1.1 The designer should design the tunnel linings so as to conform to BS EN 1990.

NOTE 1 BS EN 1990 *establishes the principles of limit state over the design working life of the tunnel.*

NOTE 2 *The two principal types of limit state are the ultimate limit state (ULS) and the serviceability limit state (SLS).*

NOTE 3 Further *definition of ULS and SLS are provided in **9.4**.*

9.1.2 The designer should design the tunnel lining so as not to exceed a limit state.

9.1.3 To achieve satisfactory performance at ULS the designer should design the tunnel lining to withstand collapse, ensuring safety of people and the structure.

9.1.4 To achieve satisfactory performance at SLS, the designer should design the tunnel lining to facilitate the performance of its function and the comfort of users with an acceptable level of maintenance.

NOTE *Given the confined nature of the tunnel environment, it is important that the designer aims to provide a tunnel structure that, in the event of failure, fail in a ductile manner, with an indication of the onset of failure through deformation and cracking. It is important that a brittle failure of the system is not the principal mode of failure in any temporary or permanent work tunnel design.*

9.2 Design situations

The designer should select design situations in accordance with BS EN 1990, ensuring that design situations are sufficiently severe and varied to encompass all conditions that can be reasonably foreseen to occur.

NOTE 1 BS *EN 1990:2002+A1:2005, **3.2** defines design situations as a series of circumstances or conditions that the tunnel lining might experience during its life. These design situations are classified as transient, persistent, accidental or seismic.*

- *transient – refers to temporary conditions applicable to the structure, e.g. during construction or repair;*
- *persistent – refers to the conditions of normal use;*
- *accidental – refers to exceptional conditions applicable to the structure or to its exposure; and*
- *seismic – refers to conditions applicable to the structure when subjected to seismic events.*

NOTE 2 *Table 7 lists typical design situations for tunnels in transient, persistent, accidental and seismic classifications. This table represent a basic outline of potential design situations, which can differ on a project-specific basis.*

Table 7 – Typical design situations for precast concrete segmental tunnel lining

Typical transient design situation	• Demoulding, storage/stacking and handling of the segmental lining • Transportation of the segmental lining • Installation of the segmental lining • Propulsion of the TBM • Grouting of the segmental lining • Initial ground and water conditions • Operation of construction equipment within the tunnel • Additional temporary works within the tunnel (i.e. temporary fixings, specific temporary works associated with openings, compressed air) • Ground treatment, including compensation grouting
Typical persistent design situation	• Construction of the tunnel in a variety of ground/geological formations • Construction of the tunnel in a variety of groundwater conditions • Out of tolerance (poor build) construction of the tunnel lining • Construction of the tunnel close to surface (buoyancy/flotation forces) • Construction of the tunnel in proximity to existing surface and sub-surface developments (loading and unloading) • Construction of future surface or sub-surface developments (loading and unloading) • Construction of an opening in the tunnel (additional loading conditions) • Situations associated with internal use of the tunnel (road, rail, water, etc.) • Operation of internal structures (such as heat increases, mechanical and electrical and ventilation ducts operation, etc.) • Internal or external environment causing deterioration of the tunnel lining over time
Typical accidental design situation	• Fire events • Bomb blast events • Flooding • Internal collisions (internal impact such as a vehicle crash or train derailment) • Internal changes in pressure (surge pressures) • External collisions (external impact load such as a ship anchor) • Unexpected unloading (removal of material above the tunnel such as dredging of rivers)
Typical seismic design situation	• Earthquakes

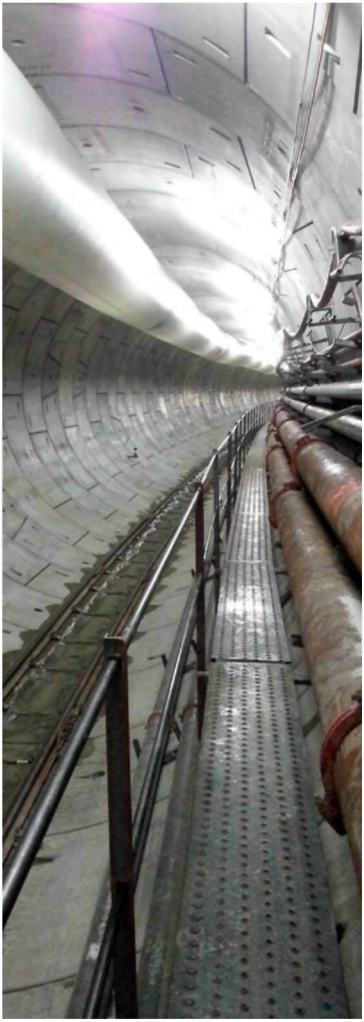

9.3 Design actions and loads

NOTE 1 *BS EN 1990:2002+A1:2005, Section* ***4*** *notes that an action is defined by a model (representing variation in time, origin, spatial position and nature or structure response). Actions and loads can be classified in one of three categories:*

- *permanent actions (G) – refers to self-weight of structures, fixed equipment, and indirect actions caused by shrinkage and uneven settlement. For tunnels, ground and groundwater loads are normally included in this category;*
- *variable actions (Q) – refers to imposed loads on structures and external surcharges; and*
- *accidental actions (A) – refers to "reasonable", i.e. probabilistic accidental events.*

NOTE 2 *Further guidance on tunnel loads and their application can be found in London Underground, Standard 1055,* Civil Engineering – Deep Tube Tunnels and Shafts *[24],* BTS, Tunnel Lining Design Guide *[NR1], Highways England,* Design Manual for roads and bridges, BD 78/99 *[25], ICE* Sprayed concrete linings (NATM) for tunnels in soft ground *[26], ITA,* Guidelines for the Design of Tunnels *[NR6].*

9.3.1 Loads associated with transient design situations

Loads associated with transient design situations consist of permanent and variable actions. The designer should derive loads from, but not limited to, the actions listed in Table 8.

NOTE 1 *Table 8 lists typical loads and actions for tunnels in the transient design situation.* This table *represents a basic outline of potential design situations which can differ on a project-specific basis.*

NOTE 2 *In transient design situations, it is reasonable to allow an increase in loading over what is required for the geological and hydrogeological conditions. However, for loads such as the application of grouting and the hydraulic TBM rams,* it *might be possible to apply a grout load significantly in excess of hydrostatic pressures or the full thrust capacity of the TBM onto the segmental lining as an accidental design situation. These cases can be entered into a risk register and eliminated through project-specific controls or considered as accidental design situations calculated in conjunction with project-specific characteristics of the system.*

Table 8 – Typical actions for tunnels in transient design situations

Loads	Permanent (G)	Variable (Q)
Self-weight [A)]	●	
Internal water pressures	●	●
Thermal effects		●
Shrinkage	●	
Grouting [B)]		●
Hydraulic rams (TBM) [C)]		●
Initial water and ground [D)]	●	
Construction equipment [E)]		●
Temporary fixings [F)]	●	●
Testing loads [G)]		●

For the purposes of this PAS, these typical actions for tunnels are defined as follows:

[A)] Self weight: The self-weight of a tunnel lining can be defined as a vertical gravity load. The density of typical materials used in the construction of the tunnel lining is defined in BS EN 1991-1-1:2002, Annex A, Table A.1 to A.5.

[B)] Grouting: The grouting operations are required to inject grout material in the annulus between the tunnel lining and the surrounding ground or voids in the tunnel lining to ensure full contact is established. Grout loads might be required to be greater than the external hydrostatic pressure in order to displace any water-filled voids.

[C)] TBM hydraulic ram loads: The ram loading due to TBM excavation, where used, is defined as the load required to propel the tunnel boring machine forward against ground and water pressure and friction of the component parts of the machine. This load is applied to the tunnel lining as a compression force acting on the leading joint face of the tunnel lining.

[D)] Initial water and ground loads: The loading due to ground and acting vertically and laterally on the tunnel. This load is influenced by seepage of water into the tunnel excavation and ground-structural interaction around the tunnel lining causing redistribution of the ground loads around the excavated void. These loads are calculated in accordance with the characterization of the ground defined in Clause **6** and the ground structural interaction model defined in Clause **11**.

[E)] Construction equipment loads are project specific. Loads include, but are not limited to, normal operation of gantry cranes, temporary construction railways, excavators and rubber-tyred vehicles within the tunnel.

[F)] Loads from temporary fixings are typically indirect loads required to support temporary services. These include, but are not limited to, spoil conveyors, temporary ventilation ducts, water and mechanical and electrical services.

[G)] Testing loads are project specific. Loads include, but are not limited to pressure testing in water and sewage tunnels, railway loading and road traffic loading depending on the tunnel type. In many cases these loads are equivalent to those expected during the working life of the tunnel lining.

9.3.2 Loads associated with persistent design situations

9.3.2.1 Loads associated with persistent design situations consist of permanent and variable actions. The designer should derive loads from, but not limited to, the actions listed in Table 9.

NOTE *Table 9 lists typical loads and actions for tunnels in the persistent design situation. This table represents a basic outline of potential design situations which can differ on a project-specific basis.*

9.3.2.2 The designer should clearly state in the drawings and the tunnel lining design report any future development loading allowance considered in tunnel lining design.

9.3.3 Loads associated with seismic design situations

Seismic design situations are characterized by the probability of seismic events in the specific project location. The designer should assess and document the frequency, magnitude and loads associated with seismic design situations with reference to ITA, *Seismic design and analysis of underground structures* [NR7].

9.3.4 Loads associated with accidental design situations

The designer should define the loads associated with an accidental design situation on a project-specific basis.

NOTE 1 *Accidental design situations are characterized as exceptional events during the design working life of the tunnel structure.*

NOTE 2 *Loads resulting from these exceptional events include fire, explosions, derailment impact from trains and vehicle collisions within the tunnel.*

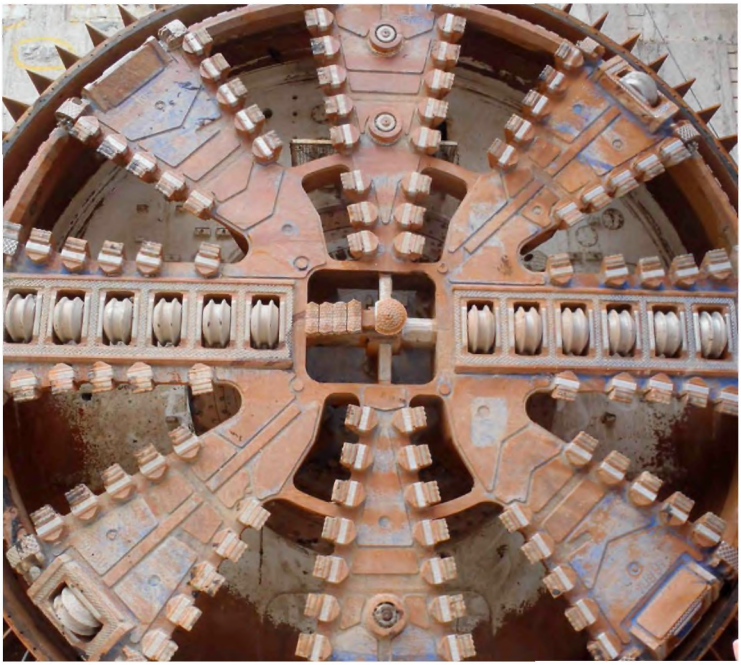

Table 9 – Typical actions for tunnels in persistent design situations

Loads	Permanent (G)	Variable (Q)
Self-weight	●	
Ground [A)]	●	
Water [B)]	●	
Existing imposed loads [C)]	●	●
Future imposed loads [D)]	●	●
Unloading/dewatering [E)]	●	
Internal loads [F)]	●	●

For the purposes of this PAS, these typical actions for tunnels are defined as follows:

[A)] Ground loads: The loading due to ground acting vertically and laterally on the tunnel. This load is influenced by the geological history of the material and ground structural interaction with the tunnel excavation (see Clause **11**). Allowance can be made for long-term effects, such as deterioration or weathering of the ground mass, swelling, creep and squeezing.

[B)] Water loads: This load represents the water pressure acting on the tunnel structure. This load is dependent on the performance requirement of the tunnel lining and fluctuations with the water table over time. Initial maximum and minimum water levels are defined by the designer and calculation of the water load needs to take into account the specific gravity of the groundwater which can vary due to salinity, for instance. If the structure is considered watertight, then these initial water levels can be applied to the structure as hydrostatic loads. However, if the structure is considered drained, then the water load is reduced to a resultant seepage load on the tunnel. The seepage load is calculated based on the efficiency of the drainage system.

[C)] Existing imposed loads can be defined with reference to existing infrastructure (imposed loads at surface include road traffic loads, railway traffic loads, weights of existing buildings acting through ground bearing foundations or imposed loads at sub-surface include piled building foundations, load transferred around/from existing tunnels). Imposed loads at surface are likely to become critical when tunnels are situated at shallow depths and at sub-surface are likely to become critical when tunnels are situated in close proximity to existing structures.

[D)] Future imposed loads are defined with reference to potential infrastructure (future imposed loads at surface: future roads, railways or ground bearing buildings, or at sub-surface such as future pile foundations). Allowance for future development loading in the design of tunnel linings might be defined by client requirements. If the proposal of a future developer is already in existence or in planning, dialogue with the developer can take place. In the absence of any guidance, the designer can apply past industry practice consisting of a surface surcharge representing a potential future development.

[E)] Unloading/dewatering is defined as a variety of loads associated with deformation of the tunnel lining structure which can act on the lining from future development proposals for surface or sub-surface excavations (at the surface, examples include the construction of basements or cuttings for road or rail infrastructure and at sub-surface or below-surface level, examples include the excavation of tunnels). Unloading/dewatering is likely to become critical when tunnels are situated at shallow depths or the excavation is in close proximity to the tunnel lining. The designer might consider an appropriate separation or magnitude of the unloading/dewatering which is insignificant to the design of the tunnel lining.

[F)] Internal loadings can be defined with reference to the tunnel use (loads include self-weight of internal structures, concentrated loads from permanent fixings, loads from rail, road or water and temperature increases in the tunnel). Where permanent fixing loads are beneficial in the persistent design situation they are not considered, as services might be removed for replacement or maintenance.

9.4 Ultimate limit state (ULS) and serviceability limit state (SLS)

NOTE *ULS and SLS are relevant to each of the four design situations (see Note to* ***9.2****). This PAS focuses on the ULSs and SLSs commonly used for transient and persistent design situations. For further information on seismic design situations refer to BS EN 1998-1 and for accidental design situations see BS EN 1990.*

9.4.1 ULS

9.4.1.1 General

NOTE 1 *The principles of ULSs can be found in BS EN 1990:2002+A1:2005,* ***3.3*** *and* ***6.4****, and BS EN 1997-1:2004+A1:2013,* ***2.4.7****.*

NOTE 2 *Of relevance to tunnel lining design, the definitions of ULSs are as follows:*

- *EQU – static equilibrium;*
- *STR – internal failure or excessive deformation of the structure or structural members;*
- *GEO – failure or excessive deformation of the ground, where the strengths of ground are significant in providing resistance;*
- *UPL – loss of equilibrium of the structure or ground due to uplift by water pressure (buoyancy); and*
- *HYD – hydraulic failure, internal erosion and piping by hydraulic gradient.*

NOTE 3 *As tunnel linings are normally considered to be confined by the surrounding medium (i.e. the ground), EQU and HYD are not normally considered critical for lining ULS verification and are therefore not covered in this PAS. Exceptions to this rule exist, for example during construction, and would be considered based on the defined design situation for the individual project. HYD needs to be considered if flow of water is allowed through the ground and into the tunnel.*

9.4.1.1.1 Of the ULSs defined in BS EN 1990:2002+A1:2005, the designer should, as a minimum, verify STR, GEO, and UPL for the design of the tunnel lining.

9.4.1.1.2 The designer should identify and document the ultimate limits states for the determined design situations and actions. Failure modes of the tunnel lining members should be identified and documented for each case.

9.4.1.1.3 The designer should verify the selected ultimate limit state by ensuring that the design effect of actions is not greater than the design resistance obtained with consideration of the partial factors on the actions, materials and resistances.

9.4.1.2 Failure or excessive deformation of structural members or ground (STR and GEO)

9.4.1.2.1 The designer should verify STR/GEO in accordance with Design Approach 1 identified in BS EN 1997-1.

NOTE *BS EN 1997-1 requires ULS verifications for persistent and transient design situations using two separate "combinations" of partial factors. The rationale behind this sub-division is to cover uncertainty relating to applied loading or actions (Combination 1, DA 1-1) and uncertainty relating to ground strength (Combination 2, DA 1-2).*

9.4.1.2.2 Where numerical analyses are used for Design Approach 1, Combination 1 (DA1-1) in tunnel lining design, the designer should adopt BS EN 1997-1:2004+A1:2013, **2.4.7.3.2 (2)**, requiring load factors to be applied to action effects (structural forces and bending moments) rather than to actions.

9.4.1.2.3 Design Approach 1, Combination 2 (DA1-2) can be applied to tunnel lining analysis, however DA1-2 requires decreasing of ground strength parameters, which can lead to an unrealistic ground behaviour. The designer should undertake a system of robust checking where this design approach is selected.

NOTE 1 *Examples of these ULSs and typical failure modes of tunnel linings are described in Table 10.*

NOTE 2 *Occasionally, the client's design standard requires the tunnel lining not to collapse up to a certain level of deformation. This is understood to consider a long-term deformation that can be induced by poor build and/or unknown future activity (either natural or human induced) around the tunnel. This is usually specified as a form of ovalization (ratio between the deformation in diameter change and the un-deformed tunnel diameter). This ovalization limit is normally interpreted into an equivalent bending moment that is required to deform the lining, and the tunnel lining is designed to have enough structural capacity to resist this bending moment. Thus, the ovalization limit is considered as an ultimate limit state requirement (see* ***10.2.1.2****).*

9.4.1.3 Loss of equilibrium of the structure or ground due to uplift (UPL)

9.4.1.3.1 For shallow tunnels, the designer should assess and document the potential for ultimate limit state failure due to flotation from the action of differential water pressure.

9.4.1.3.2 The designer should carry out UPL verification for both transient and persistent design situations in accordance with BS EN 1997-1:2004 +A1:2013.

NOTE *UPL verification can relate to buoyancy of the tunnel structure or differential heave at junctions with shafts and station boxes.*

9.4.2 SLS

The designer should define SLS on a project-specific basis.

NOTE 1 *SLS can refer to water tightness, displacement and crack width limit.*

NOTE 2 *SLS is defined during consideration of the functional requirements of the tunnel (see* ***4.1*** *to* ***4.5****).*

Table 10 – Typical STR/GEO failure modes of tunnel linings

Failure mode	Components/location
Flexural tension (structure)	Any location on the segmental lining
Direct compression failure (structure)	A bearing failure occurring at joints
Indirect tensile failure (structure)	A bursting failure occurring at joints
Direct shear (structure)	Any location on the segmental lining (for example, through segment body or assembly systems for segment tunnel linings)
Punching shear (structure)	Any location where there is a concentrated point load
Bearing capacity (ground)	Any location, but typically due to a concentrated load point being transferred to the surrounding ground (for example, a temporary prop used during the construction of a tunnel opening)
Heave of the invert of excavation (ground)	Inadequate shear strength at side wall
Excessive ovalization and collapse via loss of equilibrium (ground)	Inadequate passive resistance of the ground supporting the lining

9.5 Partial factors

***NOTE** The principles of partial factors for ULS and SLS can be found in BS EN 1990:2002+A1:2005, Section **6**. Partial factors are grouped into sets denoted by "A" (for actions or effects of actions) and "M" (for ground parameters). Further information on seismic design situation partial factors is given in BS EN 1998-1 and further information on accidental design situation partial factors is given in BS EN 1990.*

9.5.1 ULS partial factors

9.5.1.1 ULS partial factors for actions

The designer should design the tunnel lining using the partial factors for actions listed in Table 11.

*COMMENTARY ON **9.5.1.1***

Table 11 is developed from NA to BS EN 1990:2002+A1:2005, Annex A and NA+A1:2014 to BS EN 1997-1:2004+A1:2013.

Partial factors for accidental actions are not given explicitly in BS EN 1990:2002+A1:2005, but are interpreted in Table 11.

*The partial factor specified for permanent unfavourable actions does not account for uncertainty in the level of groundwater or free water. Applying a safety margin to the characteristic water level can be considered (instead of applying of the partial load factor) in accordance with BS EN 1997-1:2004+A1:2013, **2.4.6.1 (8)**.*

Groundwater pressure could be a favourable action for the tunnel lining's section design against flexural bending, but could be an unfavourable action for the joint design of segmental lining.

For variable loads that are considered to be controllable in a quantitative manner through the placing of specific control measures, such as TBM ram load and tail grout pressure, a reduction of the load factor can be considered. The amount of reduction of load factor can be determined with consideration of the workmanship, and the characteristics of the equipment.

9.5.1.2 ULS partial factors for materials

The designer should design the tunnel lining using the partial factors for materials listed in Table 12.

***NOTE 1** Table 12 is developed from BS EN 1992-1-1:2004+A1:2014 and NA+A1:2014 to BS EN 1997-1:2004+A1:2013 for transient and permanent design situations. Partial factors on structural materials can be reduced if adequate controls are applied during their manufacture. Further details are given in BS EN 1992-1-1:2004+A1:2014.*

***NOTE 2** BS EN 1992-1-1:2004+A1:2014 relaxes material factors for accidental design situations to 1.2 for concrete (from 1.5 for persistent load) and 1.0 for reinforcement steel (from 1.15 for persistent loads). Partial factors for resistances are selected according to the particular circumstances of the accidental design situation.*

9.5.2 SLS partial factors

9.5.2.1 SLS partial factors for actions

The partial factor for actions, $\gamma_{Q,G,A}$, should be taken as 1.0.

9.5.2.2 SLS partial factors for materials

The partial factor for materials, γ_M, should be taken as 1.0.

Table 11 – ULS Partial factors on actions

Duration of action	Effect of action	Symbol	Limit state		
			GEO / STR (DA 1-1)	GEO / STR (DA 1-2)	UPL
A – Partial factors on actions					
Permanent action (G)	Unfavourable	γ_G	1.35	1.0	1.0
	Favourable		1.0	1.0	0.9
Variable action (Q)	Unfavourable	γ_Q	1.5	1.3	1.5
	Favourable		0	0	0
Accidental action (A)	Unfavourable	γ_A	1.0	1.0	1.0
	Favourable		0	0	0

Table 12 – ULS Partial factors for materials

Parameters	Symbols	Limit state		
		GEO / STR (DA 1-1)	GEO / STR (DA 1-2)	UPL
M – Partial factors on ground parameters				
Angle of shearing resistance	$\gamma_{\psi'}$	1.0	1.25	1.25
Effective cohesion	$\gamma_{c'}$	1.0	1.25	1.25
Undrained shear strength	γ_{cu}	1.0	1.4	1.4
Unconfined strength	γ_{qu}	1.0	1.4	1.0
Weight density	γ_{γ}	1.0	1.0	1.0
M – Partial factors on structural materials				
Concrete	γ_{C}	1.5	1.5	1.5
Steel bar reinforcement	γ_{s}	1.15	1.15	1.15
Fibre reinforced concrete	γ_{FRC}	1.5	1.5	1.5

NOTE 1 *Partial safety factors for fibre reinforced concrete can be taken from fib Model Code for Concrete Structures 2010 [NR5], Section 5.6.6. Table 12 refers to a partial factor for FRC in flexural tension (residual strength) only.*

NOTE 2 *Modification to partial factors for concrete and steel bar reinforcement materials can be made and details are given in BS EN 1992-1-1:2004+A1:2014, Annex A.*

9.6 Load combinations

NOTE *BS EN 1990:2002+A1:2005,* ***6.4.3*** *defines the principles of combination of actions (with the exception of fatigue verifications). For persistent or transient design situations, the general format is based on a design value of the leading variable action and design combination values of accompanying variable actions. This combination introduces $\psi_{0'}$ factor for combination value of a variable action that can be used to reduce accompanying variable actions.*

9.6.1 The designer should identify a critical load case or cases for each design situation based on the project-specific conditions.

9.6.2 For ULS the designer should apply load combinations in accordance with BS EN 1990:2002+A1:2005, Section **6.4** and Table A1.2, Table B and Table C.

9.6.3 For SLS, the designer should apply load combinations in accordance with BS EN 1990:2002+A1:2005, Section **6.5**.

9.7 Structural fire design

NOTE 1 *For road tunnels, the structural fire resistance can be carried out with reference to the research developed by the ITA Working Group No. 6,* Guidelines for Structural Fire Resistance for Road Tunnels *[4]. This ITA guideline is focused on road tunnels which are exposed to severe fire scenarios induced by vehicles' fuel.*

NOTE 2 *BS EN 1992-1-2:2004 provides guidelines for the structural design of concrete structures at high temperatures and sets limitations in strength parameters for concrete and steel reinforcement as a function of the temperature. In addition, it provides simplified methods of analysis for the resistance of a section, such as the 500°C isotherm method. As the range of heating rates assumed in BS EN 1992-1-2:2004 may not be consistent with those that could be experienced by the tunnel lining, the approach may require further justification via testing, in particular with fire curves that are more onerous than the standard curve.*

NOTE 3 *Where a fire curve of higher intensity than the standard ISO 834 curve is being applied to the design and/or where high strength/low permeability concrete is used in the lining (as is typical for segmental precast linings) then consideration needs to be given to the inclusion of a nominal allowance for spalling in the structural calculations. This nominal allowance for spalling can then be specified as an allowable spalling limit in concrete material specification verified by subsequent preconstruction testing of the concrete mix that is used in the works.*

9.7.1 The designer should review the following two design situations as a minimum when undertaking structural fire design of a tunnel lining:

a) design situation 1 – resistance of the tunnel lining to withstand actions during the fire event. The critical load case is typically induced at the maximum fire temperature considering the loss of section due to spalling and loss of structural resistance due to high temperatures;

b) design situation 2 – resistance of the tunnel lining to withstand actions post-fire event, prior to repair.

9.7.2 To account for a fire event in design, the designer should assess and document the following change of material characteristics:

a) loss of section induced by explosive spalling;

b) loss of stiffness of the concrete due to increase in temperature;

c) loss of strength of concrete and reinforcement (including fibres) due to increase of temperature; and

d) expansion of the lining and partial restraint provided by the surrounding ground with resulting fire induced stresses.

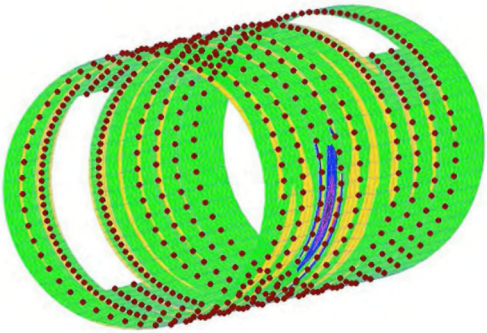

10 Precast concrete segmental lining design

NOTE 1 *A number of existing guides discuss the design of segmental tunnel linings in significant detail. Further information on segmental lining design is given in BTS,* Tunnel Lining Design Guide *[NR1]; and Association Française des Tunnels et de l'espace Souterrain (AFTES),* Recommendations for the design, sizing and construction of precast concrete segments installed at the rear of a tunnel boring machine *(TBM) [27].*

NOTE 2 *Clause **10** is drafted mainly for the bolted precast concrete segment lining, thus subclauses that deal with the connections (**10.1.3** and **10.2.4**), grooves (**10.2.2.4**), gaskets (**10.2.3**), and annulus grouting (**10.3.3**) are not applicable to expanded precast concrete segment lining.*

10.1 Geometrical properties

NOTE 1 *A precast concrete segmental tunnel lining consists of a pre-manufactured lining. The circular cross-sectional profile of the tunnel is sub-divided into a number of segments; the cross-sectional joints between these segments are called radial joints. The tunnel is also sub-divided in the longitudinal direction, due to the practicalities of placing pre-manufactured elements in the tunnel environment; these joints between segments in the longitudinal direction are called circumferential joints. A ring is defined as a series of segments that, when placed together, form a complete circle. An exception to this is a hexagonal segment that can never form a complete ring due to the half-staggered arrangement of segment assembly in the longitudinal direction of the tunnel.*

NOTE 2 *Details on the general geometrical design of the precast concrete segment lining are given in AFTES,* Recommendations for the design, sizing and construction of precast concrete segments installed at the rear of a tunnel boring machine (TBM) *[27].*

NOTE 3 *The American Concrete Institute's (ACI) Committee 544 Fiber-Reinforced Concrete publication 544.7R-16* 'Report on Design and Construction of Fiber-Reinforced Precast Concrete Tunnel Segments' [28] *provides detailed design guidance for steel fibre reinforced concrete segment linings so the designer may find this report useful for the design of segment lining, especially when steel fibre is used. However, particular attention needs to be given to the fact that ACI 544.7R-16 is written based on the American design codes rather than the Eurocodes.*

10.1.1 Segment geometry

10.1.1.1 The designer should determine the thickness of a precast concrete segmental tunnel lining based on the relevant transient, persistent, accidental and seismic design situations.

10.1.1.2 Where possible, the selection of the ring configuration should be discussed and agreed in writing between designer and contractor.

NOTE 1 *This might not be possible where the contractor has not been appointed at the time of tunnel lining design.*

NOTE 2 *A number of different rings types exist that impact construction means and methods. Examples of the different ring types of the rings can be found in the BTS,* Tunnel Lining Design Guide *[NR1]; and AFTES,* Recommendations for the design, sizing and construction of precast concrete segments installed at the rear of a tunnel boring machine (TBM) *[27]. See Figure 2 for a typical rectangular ring.*

NOTE 3 *The ring is formed with a number of initial segments and a key segment. The initial segments can be a variety of shapes – rectangular, trapezoidal or rhomboidal. The key segment is angled in a wedge shape to allow insertion longitudinally into the ring.*

Figure 2 – Typical geometry of precast concrete segment lining

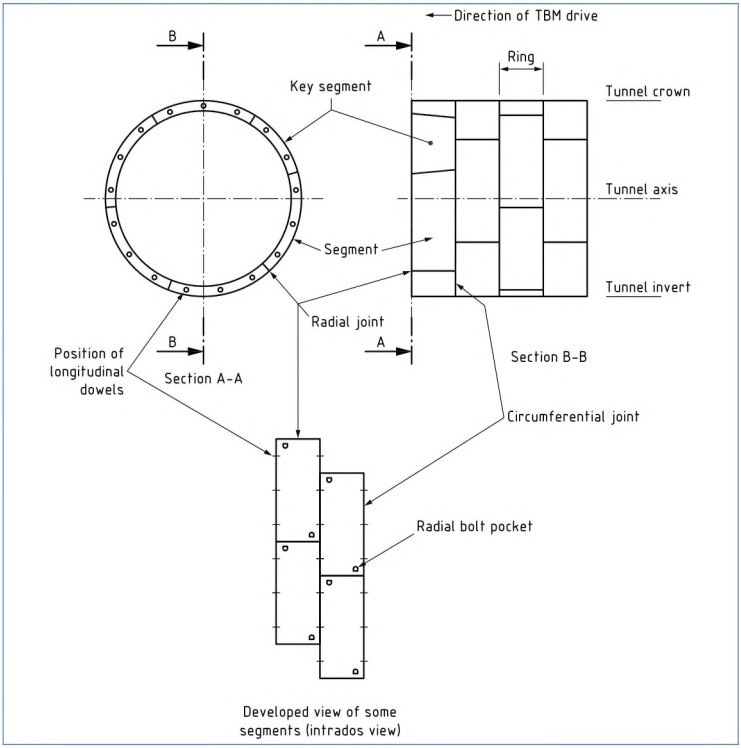

10.1.1.3 The designer should assess and document the key draw based on the anticipated dimensions of the TBM when designing the ring.

10.1.1.4 The designer should select the number of segments in a ring based on:

a) the ring diameter;
b) the size constraints for handling segments with the anticipated TBM;
c) structural performance; and
d) contractor's preference.

10.1.1.5 The designer should select the number and size of the segments within a ring to accommodate clocking positions.

10.1.1.6 The designer should set the clocking positions on each segment so that the TBM thrust ram shoe is not applied over any radial joint.

10.1.1.7 Where possible, the designer should select the number and size of the segments within a ring so that each segment, including the key segment, can always be supported by at least one TBM thrust ram during assembly of the tunnel lining.

NOTE 1 *This provision means that each segment (including the key segment) needs to have at least two bolt/dowel positions on the circumferential joint.*

NOTE 2 *This provision limits the risk of key segment slippage which has occurred on tunnels with high external ground and water pressures.*

10.1.1.8 The designer should define the longitudinal length of the ring based on the:

a) ease of construction;
b) junction/opening size;
c) structural performance;
d) contractor's preference; and
e) health and safety considerations during construction.

NOTE *Longer rings result in improved water tightness as the total length and number of circumferential joints in the tunnel overall is reduced. However, a long ring increases difficulties in installing the segment both in terms of its length (when the segment is turned in the build area) and in terms of the stroke of the hydraulic rams on the TBM (which need to retract and extend the length of the segment ring and, typically, the length of any key draw). The use of longer rings can increase the risk of damage and cracking during handling and transportation.*

10.1.1.9 The designer should examine the alignment and groundwater conditions and determine whether a tapered ring is required. Where a tapered ring is required, the designer should taper the ring width to allow the lining to be built on curves or to correct misalignments without the need for inserting packing at the circumferential joint.

NOTE 1 *A parallel-sided ring has limited capability in the correction of the build alignment.*

NOTE 2 *The taper, especially on a long ring, needs to be optimized to limit the risk of damage to the tailskin seals and the segments if the segments are not aligned within the tolerances.*

10.1.1.10 Where a tapered ring is required, the designer should add the taper to the leading and/or trailing circumferential joint faces.

NOTE *Historically, the use of a left/right tapered ring has allowed the key segment to be installed above the axis level to eliminate perceived difficulties of inserting a key segment at the invert, or to avoid high concentrated load on a key, for example from floating track slab pads. However, a modern TBM segment erection system is considered capable of placing the key segment at the invert with little difficulty.*

10.1.1.11 Where a tapered ring is required, the designer should calculate the ring's taper using the following equation (see Figure 3):

$$T = D \times B / R_{min}$$

where: T is the taper

D is the external diameter of ring

B is the mean width of ring

R_{min} is the minimum radius of design curve

Figure 3 – Calculation of taper

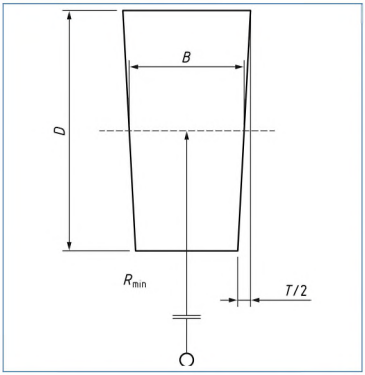

10.1.1.12 Where a tapered ring is required, the designer should determine the amount of taper required to cater for the minimum horizontal and vertical alignment and the amount of correction required to cater for construction tolerance.

10.1.1.13 The designer should provide a mechanical shear connector for the erection of smooth-bore segments.

NOTE *For example, a pin on the erector and a socket on the segment.*

10.1.2 Joint profile

NOTE *Joint profiles refer to the shape of the joint from extrados to intrados of the lining.*

10.1.2.1 The designer should assess and document the impact of load transfer between segments at joint locations.

10.1.2.2 The designer should provide a stress relief recess at the intrados and extrados edges of the joint to concentrate the load into the centre of the joint, in order to avoid spalling at the segment corners.

10.1.2.3 The designer should design a waterproofing system at the joint to fulfil the client's functional requirements.

NOTE 1 *Provision of a caulking groove on the intrados edge can be considered in order to improve control of leaking water on a project-specific basis (see* ***10.2.2****)*

NOTE 2 *The waterproofing system would typically be a single gasket on the extrados side or, if required, a combined hydrophilic EPDM gasket or a double system on both sides of the joint.*

10.1.2.4 The designer should select a profile for the circumferential joint.

NOTE *This is typically a flat-flat joint arrangement to allow the most efficient transfer of ram loading from the TBM.*

10.1.2.5 The designer should select a profile for the radial joint based on the anticipated ovalization and axial compressive force.

NOTE *There is greater flexibility regarding the profile of the radial joint face, which is predominately governed by the structural behaviour of the tunnel ring. A number of options are available, e.g. flat-flat joint, convex-convex joint, convex-concave joint, convex-flat joint and tongue-groove joint profile.*

10.1.3 Connections

10.1.3.1 The designer should design the segments with connection systems on the radial and circumferential joints to be used during construction.

10.1.3.2 The designer should design and select the connection systems to:

a) meet the required construction tolerances during ring build;

b) be capable of maintaining the integrity of the waterproofing system under all load cases; and

c) be capable of being installed from a place of safety.

NOTE 1 *The different types of connection system and guidance to their selection is given in AFTES,* Recommendations for the design, sizing and construction of precast concrete segments installed at the rear of a tunnel boring machine (TBM) *[27], Section 3.5.5.*

NOTE 2 *The relative stiffness of the connecting system and the segments can provide some reduction of flexibility in movement and consequent localized stresses and risk of damage. In such scenarios, modelling both the segmental lining ring and the connecting systems might be required to verify this loading case.*

10.1.3.3 Where applicable, the designer should design the size and number of bolt pockets to provide sufficient surface area for the use of a vacuum segment erector.

NOTE *In TBM construction, vacuum erectors are widely used and the lifting capacity of the vacuum erector is highly dependent on the available suction area that is affected by the number and size of bolt pocket.*

10.1.3.4 The designer should assess the risk of segment damage against the need to remove the bolts once the ring is complete and grouted into place and advise the client of any identified risks.

10.1.4 Manufacturing tolerances

10.1.4.1 The designer should define manufacturing tolerances of segments and rings in accordance with BTS, *Specification for Tunnelling*, Section 204 [NR2].

10.1.4.2 The designer should determine the appropriate manufacturing tolerances when designing convex or concave radial joints.

10.1.4.3 The designer should document the defined manufacturing tolerances in a project's materials and workmanship specification.

NOTE *A full ring mock-up section to test the geometrical tolerance of the ring is essential for the precast concrete segment lining. It is advisable to build at least three test rings to confirm fully-integrated ring-to-ring connection geometry.*

10.2 Design recommendations for precast concrete segment lining

10.2.1 Segment section design

10.2.1.1 Flexural tension failure check

NOTE 1 *The segment element is considered to be a beam element that receives both axial load and bending moment at the same time for the verification of flexural tension and compression failure.*

NOTE 2 *Further information on the development of the moment-hoop thrust envelope (M-N envelope) is given in BS EN 1992-1-1.*

NOTE 3 The *flexural tension failure of the tunnel lining is usually verified with the use of the M-N envelope.*

10.2.1.1.1 When developing the M-N envelope, the designer should ignore the flexural tensile strength of plain concrete.

10.2.1.1.2 When FRC is used, the designer should use the α_{cc} specified for reinforced concrete rather than plain concrete to determine the lining design's compressive strength, provided the dosage of fibre is enough to make the lining fail in ductile mode (see Figure 4). Where the dosage of fibre is not enough to make the lining fail in ductile mode, the factor for plain concrete should be used.

*COMMENTARY ON **10.2.1.1.2***

α_{cc} is a coefficient that takes account of long-term effects on the compressive strength and of unfavourable effects resulting from the way the load is applied for determining the design compressive/tensile strength value. NA+A2:2014 to BS EN 1992-1-1+A1:2014 requires reducing of α_{cc} 0.85 to 0.6 for the plain concrete which is considered not applicable for fibre reinforced concrete lining structure. α_{cc} directly affects the size of compression block which governs the size of M-N envelope.

When determining the shape and size of tensile stress block in an FRC lining, it is advisable to use the fib Model Code for Concrete Structures 2010 *[NR5].*

Various recommendations on the structural design of FRC are available in the industry and those recommendations are being improved/updated as a result of continuous academic research and industry feedback. This PAS does not specify a prescriptive design process for FRC but sets out external design recommendations that are considered suitable for the tunnel lining design guide.

Figure 4 – Schematic diagram of strain and stress block for reinforced concrete and fibre reinforced section for the development of the M-N envelope

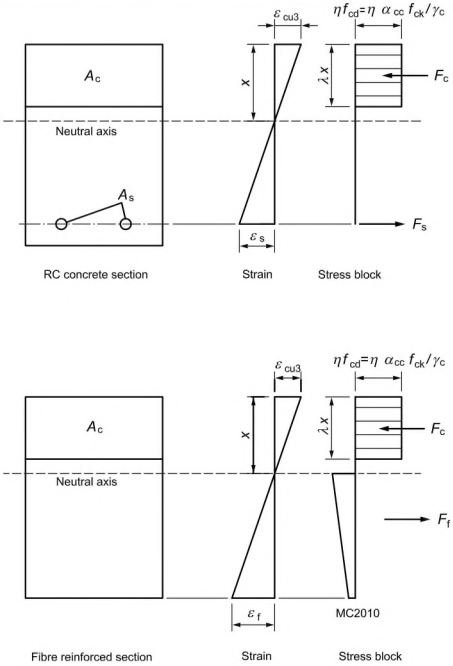

Key

A_c	area of compression in the design section	λ	0.8 for $f_{ck} \leq 50$MPa 0.8 - (f_{ck}-50)/400 for $50 < f_{ck} \leq 90$MPa
A_s	area of tension reinforcement	ε_{cu3}	ultimate limit strain for bi-linear stress-strain relationship (see BS EN 1992-1-1:2004+A1:2014, Figure 3.4 and Table 3.1)
F_c	compressive force	ε_s	strain of reinforcement steel (varies with neutral axis position)
F_s	tension force in reinforcement	ε_f	strain of fibre reinforced concrete respectively (varies with neutral axis position). The strain limit is considered with the maximum allowed crack width in steel fibre concrete section for ULS (see fib *Model Code for Concrete Structures* 2010, Section 5.6 [NR5])
F_f	tension force in the tension section of fibre reinforced concrete section	f_{cd}	design compressive strength of concrete
f_{ck}	characteristic compressive strength of concrete (see BS EN 1992-1-1:2004+A1:2014, Table 3.1)	α_c	partial material factor of concrete (equally applies to both reinforced and fibre reinforced concrete)
η	1.0 for $f_{ck} \leq 50$MPa 1.0 – (f_{ck}-50)/200 for $50 < f_{ck} \leq 90$MPa	α_{cc}	0.85 (both reinforced and fibre reinforced concrete)

10.2.1.1.3 The designer should determine the hoop thrust and bending moment generated in the tunnel lining using analytical methods that suit the condition of the design section (see Clause **11**).

10.2.1.1.4 The designer should determine the load combination factors and material factors with reference to the design situations and considered limit state (see Clause **9**).

10.2.1.1.5 The designer should demonstrate that the hoop thrust and bending moment in the lining lies within the M-N envelope for the verification to the flexural tension failure of the segment.

NOTE *When the hoop thrust and bending moment points are plotted outside of the M-N envelope, there are two ways to resolve the issue. One is to increase the segment lining's structural resistance, which normally involves increasing the reinforcement or using a higher grade of concrete. Increasing the thickness of the lining can also help if the load is primarily axial, but by making the lining thicker and stiffer, it can attract more bending moment. The other method is to decrease the bending moment by placing more radial joints on a segment ring, i.e. increasing the number of segments of a ring. Increasing the number of segments of a ring can provide the designer with a simple solution in verifying the flexural tension failure, however this can significantly affect the ring erection time, segment storage space, segment logistics regime, and length of gasket, etc.*

10.2.1.2 Deformation limit check

10.2.1.2.1 When checking the deformation limit, the designer should review the project documentation for any deformation limit specified by the client and any precedent in relation to ovality of existing tunnels in similar ground conditions as a result of construction tolerances. The designer should design the tunnel lining such that it has sufficient structural resistance in both section and joint up to the specified deformation limit.

10.2.1.2.2 The designer should determine the most suitable analysis method with reference to the lining geometry and the joint details.

COMMENTARY ON ***10.2.1.2.2***

For a circular tunnel, the designer can use the following equation (10.1) as a first analysis method to determine the tunnel lining's bending moment in relation to the deformation of the lining:

$$M_{max} = 3 \times u_{max} \frac{E\, I_e}{r^2} \quad (10.1)$$

where:

M_{max}	*is the maximum moment at* u_{max}*;*
u_{max}	*is the maximum deformation on radius;*
E	*is the elastic modulus of lining;*
I_e	*is the tunnel lining's effective stiffness as a continuous ring;*
r	*is the external radius of lining.*

Alternatively, beam spring models or FE models that are capable of modelling the joint interaction can be used to determine equivalent bending moment that matches the deformation.

When the tunnel ring has more than four radial joints, the designer can consider the reduction of the ring stiffness I. The following equation (10.2) can be used as a first method of determination of the reduced ring stiffness:

$$I_e = I_j + I \left(\frac{4}{n}\right)^2 \quad (I_e \leq I,\ n > 4) \quad (10.2)$$

where:

I_e	*is the tunnel lining section's effective stiffness as a continuous ring;*
I_j	*is the tunnel lining's section stiffness at the joint with considering of joint's contact width;*
n	*is the number of segments in the lining (when the key segment is smaller than a standard segment, it can be accounted for as a proportion of a standard segment);*
I	*is the tunnel lining section's stiffness with consideration given to the full section thickness of lining (not at the joint).*

Alternative methods proposed by various authors for the determining of the reduced ring stiffness are available from various journals and articles in the industry – for example, Muir Wood, Tunnelling: Management by Design *[13], Japanese Society of Civil Engineers (JSCE),* The design and construction of underground structures *[29], and Blom,* Design philosophy of concrete linings for tunnels in soft soils *[30]. The designer can use other methods, provided those alternative methods are reviewed and agreed with the client through the AIP.*

The designer can ignore the reduction of ring stiffness and use I for the design of the segment when the radial joint of the lining is designed to transfer full bending moment through the joint.

The designer can estimate I_j to suit the geometry of the joint and the anticipated behaviour of the joint when the lining is being deformed.

For the verification of the long-term deformation limit check, it is advisable that the designer demonstrates that the calculated M_{max} combined with the factored hoop thrust estimated from the most onerous long-term permanent load case is plotted within the M-N envelope of the segment. Both the highest and lowest hoop thrust are usually considered to determine which case is the most onerous. M_{max} is usually not combined with any accidental load case.

Although M_{max} is obtained from the deformation limit, a suitable load factor can be considered for the M_{max}.

See *Morgan,* A contribution to the analysis of stresses in a circular tunnel *[31] for the origination of equation (10.1).*

See *Muir Wood,* The circular tunnel in elastic ground *[32] for the origination of equation (10.2).*

10.2.1.3 Shear failure check

The designer should design the tunnel lining against shear failure in accordance with BS EN 1992-1-1:2004+A1:2014, **6.2**.

NOTE *BS EN 1992-1-1:2004+A1:2014 does not consider the contribution of fibres in the increase of shear resistance. fib* Model Code for Concrete Structures 2010, *Section 7.7.3.2 [NR5] considers the contribution of fibres to the shear resistance when fibres are used with bar reinforcement, but no design guidance is provided for the fibre only reinforced concrete. For fibre only reinforced concrete lining, BS EN 1992-1-1:2004+A1:2014,* ***12.6.3*** *can be used for the ULS shear resistance verification.*

10.2.2 Joint design

10.2.2.1 General

10.2.2.1.1 The designer should verify the segment lining's joint for both bearing and bursting failure.

10.2.2.1.2 When verifying the segment lining's joint design, the designer should assess and document the TBM ram loading (circumferential joint) and hoop thrust (radial joint).

10.2.2.2 Bursting

10.2.2.2.1 Bursting failure verification is considered to be a ULS verification. When verifying bursting failure at the joint, the designer should assess and document:

a) construction tolerance at the joint – so-called lips and steps: this reduces the joint contact width, and also influences the centre line of the stress line;

b) when there is no clear project-specific guidance on the construction tolerance, the designer should act in accordance with the BTS, Specification for Tunnelling, Section 328 [NR2];

c) the shape of the joint and the actual contact areas between the two segments;

d) the contact area between the ram loading and the segment, including all tolerances; and

e) rotation at the joint (birdsmouthing): this affects the shape of the compressive stress block at the joint – when the birdsmouthing is significant, the joint contact width decreases, increasing the bursting stress.

NOTE *The level of joint rotation is linked to the sectional distortion of the lining. The angle of birdsmouthing can be estimated using geometrical relationship with consideration of the determined hoop thrust and bending moment level at the radial joint.*

10.2.2.2.2 The designer should carry out joint bursting stress checks, taking account of the joint-facing geometry.

NOTE 1 *Joint bursting stress checking is sensitive to the joint contact width. A schematic comparison of the stress distribution at the joint between the flat joint and the convex-convex joint is demonstrated in Figure 5 and Figure 6. Further information on the types of joint geometry is given in AFTES,* Recommendations for the design, sizing and construction of precast concrete segments installed at the rear of a tunnel boring machine (TBM) *[27], Section 3.5.3.*

NOTE 2 *The load on the segment joint is normally not uniformly distributed and can be applied with an eccentricity. The simplification shown in Figure 7 can be used for the hand calculation of the joint bursting force unless a finite element (FE) model is used with the use of actual load distribution on the joint.*

Figure 5 – Joint contact width and stress distribution change with joint rotation for flat joint

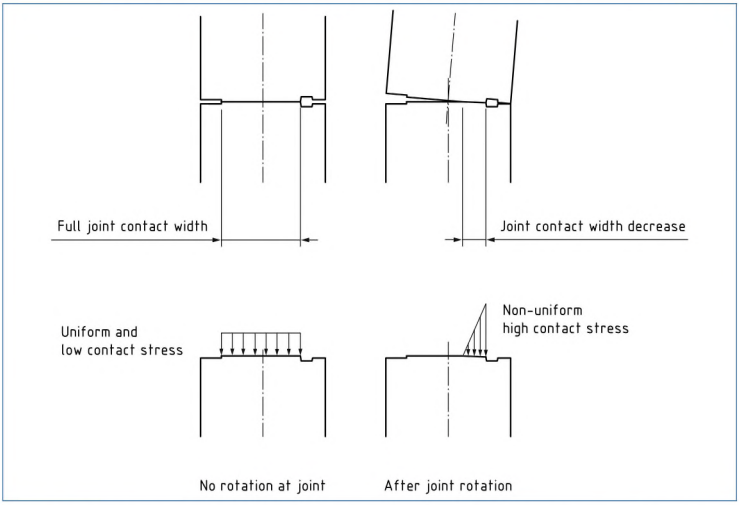

Figure 6 – Joint contact width and stress distribution change with joint rotation for convex-convex joint

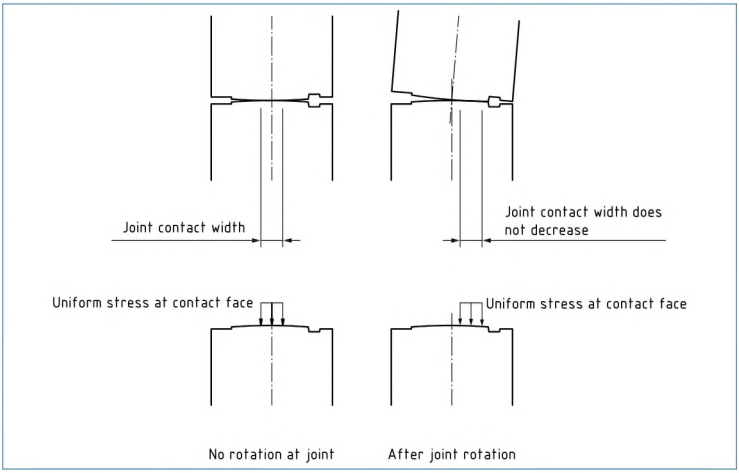

Figure 7 – Simplification of non-uniform load with eccentricity for bursting check on flat joint

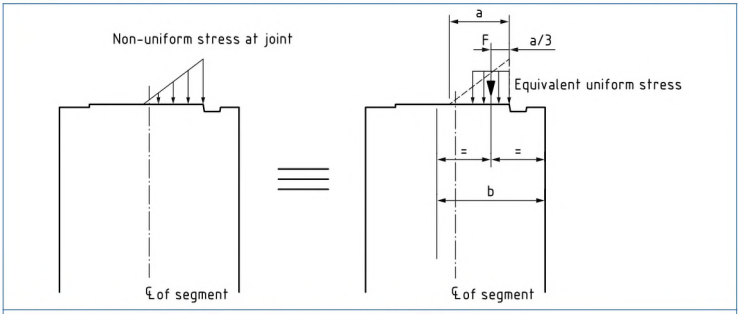

***NOTE** Notations in the figure refer to BS EN 1992-1-1:2004+A1:2014,* **6.5.3** *(3)*

10.2.2.2.3 The designer should determine the bursting force at the joint of the tunnel lining in accordance with BS EN 1992-1-1:2004+A1:2014, **6.5.3** (3).

***NOTE** Alternatively, some designers elect to use Leonhardt's empirical equation to obtain the distribution of bursting tensile force along the depth of the joint. The FE analysis method can also be used to determine bursting stress at the lining joint.* For *Leonhardt's equation, see Leonhardt,* Prestressed Concrete Design and Construction *[33], Chapter 9.*

10.2.2.2.4 The design tensile strength of concrete should be in accordance with BS EN 1992-1-1:2004+A1:2014, **3.1.6** (2) for plain concrete and FRC.

10.2.2.2.5 The designer should assess and document the necessity of full-scale testing to justify the capacity of a segment under large loads at the joints in accordance with BS EN 1990:2002+A1:2005, **5.2** and Annex D.

***NOTE** Design assisted by testing can provide a more detailed behaviour of an FRC segment prior to and after cracking. It can be beneficial for determining the bursting capacity of the FRC segment.*

10.2.2.2.6 If the design tensile strength of the concrete is less than the bursting stress, the designer should design the joint to be reinforced to have sufficient tensile resistance to prevent bursting.

10.2.2.3 Bearing

For the precast concrete segment lining, the designer should verify bearing failure at the radial joints in accordance with BS EN 1992-1-1 :2004+A1:2014, **10.9.4.3** (6) and **6.7**.

10.2.2.4 Groove and edge design

10.2.2.4.1 The designer should document the geometry of the joint with consideration to:

a) the dimension of the gasket groove;

b) the necessity of caulking groove at intrados edge of segment; and

c) recesses or chamfers to prevent corner edge damage.

***NOTE** Further information on the types of waterproofing gaskets, and guidance on their selection, is given in AFTES,* Recommendations for the design, sizing and construction of precast concrete segments installed at the rear of a tunnel boring machine (TBM) *[27], Section 3.5.4.*

10.2.2.4.2 The designer should document the dimensions of the gasket groove to suit the manufacturer's selected product detail.

10.2.2.4.3 The designer should design the gasket location to have enough distance from the outer edge of the segment to avoid edge spalling near the joint, taking account of construction tolerances (see Figure 8).

***NOTE** The edge spalling is not considered to be an ultimate limit failure of the segment ring, but affects the durability and serviceability (water tightness) design.*

10.2.3 Gasket design

10.2.3.1 The designer should select the gasket to meet water tightness requirements under the design water pressure for the design working life with consideration of the chemical composition of the groundwater.

Figure 8 – Edge spalling schematic

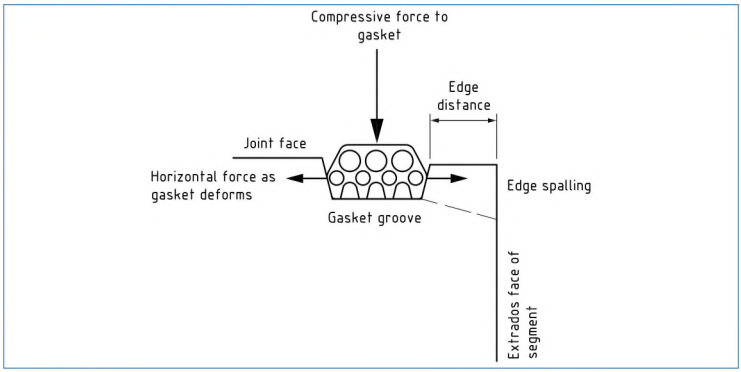

Figure 9 – Example of EPDM Gaskets gap pressure curve

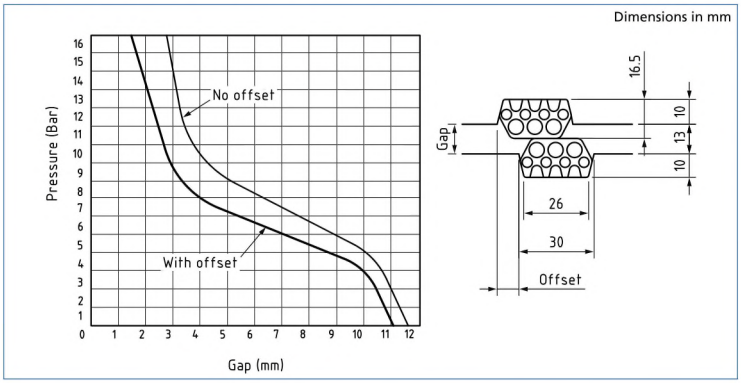

10.2.3.2 The designer should verify the gasket design for all possible combinations of pressure, offset induced by the construction tolerance (lips and steps) and maximum gap due to birdsmouthing at the joint associated with ring diametrical deformations induced by construction tolerances and loading conditions.

NOTE 1 *The gasket's water tightness capacity varies with the gap and offset (construction tolerance). When the lining deforms, the lining's radial joints tend to rotate and make the joints open. The birdsmouthing increases the gap between the joint face, meaning the gasket's water tightness capacity is decreased.*

NOTE 2 *Figure 9 illustrates the typical relationship between the water tightness capacity defined in water pressure bar and the gap distance with and without offset.*

NOTE 3 *The gasket can be either glued to the lining following manufacture of the segment or can be cast in the lining during the manufacture of the segment.*

NOTE 4 *A double gasket system, i.e. two rows of gaskets, one at extrados and the other at intrados, can be considered to provide a secondary water tightness line within the segment joints. Care needs to be given to the fact that the water tightness capacity (i.e. bars) of the double gasket system is defined by the higher capacity of the two gaskets, not by the sum of both gaskets' capacity.*

10.2.4 Bolt and dowel socket/pocket design

10.2.4.1 The designer should design the bolt socket to avoid a block shear failure along the weakest section at the bottom of the bolt pocket against the pre-tensioning force of the bolt.

NOTE *Where a block shear failure occurs, this is considered to be a ULS verification.*

10.2.4.2 The designer should design the bolt and dowel socket to provide enough pull-out resistance against the pre-tension force of the bolt and the pull-out force of the dowels (coming from the gasket's push-away action).

NOTE 1 *When the use of packers is expected, the packer compression and unload characteristics need to be considered together with the gasket parameters.*

NOTE 2 *Particular attention needs to be paid to the push-fit type dowel's engagement tolerance because inadequate engagement tolerance can cause the risk of segment slipping back during erection of the next ring.*

10.2.4.3 When designing the segment, the designer should assess the interaction between the bolt pockets, grout holes and dowels to ensure they do not lead to a plane of weakness and cracking on the segment.

10.3 Design recommendations for transient design situations

10.3.1 Transport, storage and handling

10.3.1.1 The designer should determine a lifting method for the segments for key stages including demoulding, rotation, stacking, transport and erection in the TBM, including segment connections, taking due account of health and safety considerations.

NOTE 1 *Safety factor requirements for segment erection by TBM are given in BS EN 16191:2014,* ***5.2.5.2****. Further information on health and safety requirements is given in BS 6164:2011,* ***7.8.2.5****.*

NOTE 2 *Typical lifting methods of a segment include the use of a vacuum erector, single-point lifting, clamping or the use of a forklift.*

10.3.1.2 The designer should design the segment to account for the loads resulting from lifting and handling, from the initial casting to the erection inside of the TBM. While these transient actions vary from one project to another, the designer should check operations against the following list for the segment design:

a) segment lifting and turning during curing and mould stripping;
b) handling stages from precast plant to storage areas;
c) segment stacking and insertion of timber spacer between units;
d) removal from storage and unloading on site;
e) transportation along the tunnel;
f) segment erection in the TBM;
g) TBM gantries' wheels rolling over the last segmental rings installed.

10.3.1.3 The designer should carry out design checks to assess the impact of the stresses induced on the segments at each design stage. The design checks should consider:

a) the possible dynamic effects of handling (e.g. placing a segment on a stack during lifting or storage stages);

b) implementation tolerances (e.g. accuracy of intersegment block positioning at the storage area); and

c) the true age of the concrete and its characteristic strength, when carrying out each relevant operation.

NOTE *Certain cases can become dimensionally critical and might require either the short-term improvement of concrete properties or the increased reinforcement of sectional areas. It is advisable to consider re-designing the handling and stacking process with modifications to the equipment rather than re-designing the segment to satisfy handling and stacking requirements.*

10.3.1.4 The designer should document the size, number and geometry of sockets in accordance with the TBM erector's details to limit the risk of damage (also see **10.3.1.1** in relation to the provision of a shear pin). The designer should ensure the segment is compatible with an erector conforming to BS EN 16191.

NOTE *Further information on shear pins is given in BS 16191:2014, **5.2.5.2**.*

10.3.1.5 Where two sockets are required, the designer should position them to avoid causing a plane of weakness within the segment.

NOTE *Sockets can be equipped with the cast-in grout/lift plug with non-return valve for grouting.*

10.3.2 Hydraulic ram loads

10.3.2.1 The designer should estimate and document the design ram loads based on the specific geotechnical conditions for the project, taking account of any project-specific requirements. The maximum ram loads should be confirmed by the contractor prior to segment manufacture.

NOTE *Ram loads are applied to the precast concrete segmental lining to propel the TBM forward against friction caused by the dead load of the machine and the ground and water pressures. The force imparted by the hydraulic ram provides a concentrated variable load onto the circumferential joint face of the lining.*

10.3.2.2 Designers should assume a plane face for adjacent rings and ensure any cracking induced by the ram loads is within a width limit (specified in the durability report) that does not affect the serviceability of the lining.

NOTE *Packers can be used for the correction of plane.*

10.3.3 Annulus grouting

10.3.3.1 The designer should define annulus grouting for primary and secondary grouting in a TBM-driven segment-lined tunnel.

NOTE *Primary grouting is commonly carried out before the ground load is fully transferred to the segment lining, unless the ground is very soft (e.g. very young marine clay). The primary grout load is therefore considered to be hydrostatically applied to the lining.*

10.3.3.2 The designer should specify grout injection pressure in the segment lining design with reference to the hydrogeological condition of the ground.

NOTE *For primary grouting, BTS,* Specification for Tunnelling *[NR2] requires sufficient pressure to place the grout properly but not greater than 1 bar above the prevailing hydrostatic pressure at the location of grouting.*

10.3.3.3 The designer should estimate and document the tunnel lining's hoop thrust due to the maximum grout injection pressure using one of the analysis methods described in Clause **11**. The designer should then verify the segment lining's stability using the M-N envelope.

NOTE 1 *It is unlikely that primary grout pressure is a critical load case for the segment design unless the hydrostatic groundwater pressure is very high.*

NOTE 2 *Secondary grouting is carried out for a specific ring or segment only when primary grouting proves insufficient. Secondary grouting is normally performed through the grout hole by the drilling of the segment. As the secondary grout area is localized, it is unlikely that the secondary grout is going to deform the entire ring in a symmetric shape. The potential failure mode is punching shear failure along the perimeter of the grout area but this is rare. It is difficult to verify the structural stability of the segment against the secondary grouting without knowing the size of the area that secondary grouting is likely to be applied to. It is therefore advised that the designer check punching shear failure with a reasonable assumption for the grout area. Unless specific guidance is provided by the client's design standard, a 1 m × 1 m section can be used for the punching shear checking.*

10.3.4 Other loads

The designer should assess and document the impact of other bespoke loads such as construction vehicle loads on the precast concrete segmental lining (see Table 8).

NOTE *An example of a construction vehicle load is the self-weight of the back-up train behind the TBM. Construction vehicles impart a concentrated variable load case onto the precast concrete segmental lining.*

11 Concrete segment lining modelling

11.1 General

The designer should model the behaviour of the tunnel in the geological setting where it is to be constructed, in order to obtain information for:

a) the design of the geotechnical and structural components of the tunnel;

b) the selection of necessary control measures to monitor and safeguard the tunnel construction and adjacent affected assets; and

c) a better understanding of the possible mechanisms of failure, including an assessment of risks and potential mitigations.

NOTE 1 *The creation of models for the design of the tunnel lining requires the simplification of a complicated real problem to a simplified theoretical model. The selection of the modelling approach for the ground behaviour, the tunnel behaviour and their interaction is a key aspect in the design of the tunnel lining.*

NOTE 2 *The ultimate output from the modelling of a tunnel structure, whether it is with simplified closed-form solutions or advanced numerical modelling, is the parameters required for the design of the tunnel lining. These include the internal forces of the lining's structural members (axial forces, bending moments and shear forces) which form the basis for the sizing and structural checks of the tunnel lining and any associated detail such as assembly systems and waterproofing.*

NOTE 3 *The modelling can also indicate the state of stress and behaviour of the ground which can be an important aspect of the design, especially at junctions and other changes of profile.*

NOTE 4 *In addition, some modelling approaches can provide resulting deformation of the tunnelled structure and the ground above or adjacent to it. These outputs are required to meet performance requirements for the new tunnel and justify that the effects of the tunnel construction to adjacent above and below ground structures are suitably managed.*

NOTE 5 *Clause **11** focuses on modelling approaches with particular reference to segmental lining design. While some of the recommendations are applicable to mined tunnel design and permanent cast-in-situ design, it is advisable that reference for the modelling of these structures is sought in other guidelines such as those provided by the BTS and ITA.*

NOTE 6 *The BTS,* Tunnel Lining Design Guide *[NR1] and the ITA,* Guidelines for the Design of Tunnels *[NR6] are among various references available that describe the methods for the analysis of tunnels with or without an explicit inclusion of the ground and structure interaction.*

NOTE 7 *The basic theoretical framework for ground-structure interaction analysis of tunnel linings is given in Szěchy,* The Art of Tunnelling *[34]. It includes mathematical derivation from the first principles of closed-form solutions for various design cases, which form the basis of most modern methods of analysis.*

11.2 Selection of modelling approach

11.2.1 In order to achieve a robust tunnel lining design model, the designer should:

a) select a suitable ground behaviour model and associated criteria for geotechnical and hydrological parameters;

b) select a suitable method to model the structural behaviour of the tunnel;

c) select a suitable method to simulate the interaction between the ground model and the tunnel lining model to obtain the effects of such interaction.

11.2.2 The designer should use the ground behaviour models in **11.3** to estimate the loading and restraints provided by the ground within the geotechnical environment extrapolated from the ground model as defined in Clause **6**. The designer should decide whether analytical methods based on closed-form solutions or more advanced methods via numerical modelling are appropriate for the stage of the design under consideration.

11.2.3 The designer should define the tunnel lining parameters in accordance with **11.4** to obtain the required structural input parameters for modelling the correct behaviour of the tunnel lining.

NOTE *These parameters are selected with reference to the geometrical and material characteristics for the structural design based on the recommendations given in Clauses **6** to **10**.*

11.2.4 The designer should select the ground and structure interaction model from those set out in **11.5**.

NOTE 1 *These methods include analytical models (closed-form solutions), bedded spring models and full numerical modelling.*

NOTE 2 *Due to their relative simplicity and limited amount of input parameters, analytical models and bedded spring methods are a useful tool for preliminary analysis and validation of results from more complex methods of analysis, as well as back analysis of monitoring data.*

NOTE 3 *Numerical analyses offer the ability to model explicitly complex structures and uneven ground loading and behaviour, including adjacent above and below ground structures, different geological strata, detailed constitutive behaviour and construction sequences. This provides an unparalleled capability for simulating ground behaviour, structural behaviour and ground and structure interaction. However, due to the complexity of some numerical modelling, more time and effort is required to produce a robust model.*

NOTE 4 *The selection of the overall approach depends on the complexity of the analysis in terms of geotechnical and geometrical conditions and could vary depending on the stage of the design.*

11.2.5 The designer should verify any selected approach with an alternative method and undertake sufficient sensitivity studies to assess the variability in results due to the consideration of a range of values to account for the variability in input.

11.3 Selection of the ground behaviour model

11.3.1 Ground pressures

The designer should select a ground behaviour model to estimate the ground loading acting on the tunnel.

NOTE *The selection of a ground behaviour model depends on the ground conditions as well as on the stage of the design. The most common methods include the following:*

- *Full overburden – Full ground vertical stress is assumed to act at the tunnel axis level. This is used to obtain ground loads for tunnels in softer ground or loose soils where arching effect is unlikely over the design working life of the structure.*
- *Ground arching – Terzaghi,* Theoretical Soil Mechanics *[35] proposed the arching effect defined as a "transfer of pressure from a yielding mass of soil onto adjoining stationary parts". The arching effect is facilitated and maintained solely by the shear strength of the ground. The arching effect can be used to carry out an analytical calculation of the ground loads on tunnels of various geometries. The mathematical framework for arching in shallow and deep tunnels in soft ground is given in Szēchy,* The Art of Tunnelling *[34].*
- *Convergence-confinement method – Effective ground loading on the tunnel lining can be obtained from the principles of the convergence-confinement method. An estimate of the ground forces before installation of the lining can be obtained through the definition of the ground reaction curve described in Annex C. When estimating ground loads using this method, ground parameters and in-situ stress are assessed in drained or undrained conditions depending on the hydrological conditions. Water pressures cannot be relaxed and can be superimposed to obtain the total pressure on the tunnel lining.*
- *Numerical analysis – 3D or 2D axisymmetric numerical models can model, explicitly, the behaviour of the ground around a tunnel structure and provide the most realistic estimate of ground loading for tunnels in soft ground, accounting also for the method of construction. Further details on numerical analysis are included in* ***11.7****.*

11.3.2 Groundwater pressures

The designer should assess and document the most unfavourable groundwater pressures and seepage forces to which the tunnel lining might be subjected at different stages of construction and throughout the tunnel's operational life, and implement those assessed groundwater pressures in the analysis of the tunnel lining in accordance with Clause **10**.

NOTE *Coupled models in full numerical analysis can be used to model the flow of water and variation of groundwater pressure with the excavation stages and the associated variation of ground stress distribution, while uncoupled models provide a simplified staged groundwater behaviour. As such, coupled models provide a better understanding of the groundwater behaviour around a tunnel excavation.*

11.3.3 Ground parameters

11.3.3.1 The designer should specify in-situ ground investigation and laboratory tests to provide the specific ground parameters required in the chosen constitutive ground model (see Clause **6**).

NOTE *The ground stiffness is a key parameter for the behaviour of the tunnel in the modelled ground model. Closed-form solutions are based on linear-elastic stiffness of the ground mass, although this provides only a rudimentary model of the highly non-linear elastic-plastic behaviour of the ground.*

11.3.3.2 Where the ground's non-linear behaviour is found to be critical for the design of the tunnel lining, the designer should select more advanced analyses.

NOTE *For example, when the extent of the plastic zone around the tunnel opening is extensive, the designer can decide to use numerical models with a full characterization of the ground in terms of strength parameters and incorporate stiffness variation with strain into their choice of ground stiffness model.*

11.3.3.3 To include non-linear behaviour in terms of ground stiffness in bedded spring models, the designer should designate non-linear springs by defining an equivalent force-displacement curve for the springs.

NOTE *The springs are calibrated by separate numerical models which account for the most critical geotechnical conditions.*

11.3.4 Ground-lining interface

11.3.4.1 When analysing tunnel linings using analytical methods, the designer should assess and document the behaviour of the ground-lining interface as this can have a significant effect on the forces in the lining as well as the general deformed shape.

11.3.4.2 The designer should select the ground-lining interface to simulate the interface condition as assumed for the design of the tunnel lining.

NOTE *Most closed-form solutions allow representation of the ground-lining interface as either "full-slip" or "full-bond" (see Annex B).*

11.3.4.3 The designer should derive the determination of the tangential stiffness in soft ground in accordance with the methodology given in Dixon, *Analysis of tunnel support structure with consideration of support-rock interaction* [NR8].

NOTE 1 *The designer can simulate the interface shear stiffness in bedded beam springs models by including tangential springs. Full-slip is automatically applied if no tangential springs are added to the model.*

NOTE 2 *The designer can define more advanced relationships in numerical modelling where constitutive models for interface elements between ground and lining are used for an explicit definition of this interface.*

11.4 Definition of the lining model

11.4.1 Lining material parameters

The designer should determine lining material parameters in accordance with Clauses **7** to **10** of this PAS.

NOTE *Most approaches for tunnel lining design are carried out assuming constant linear-elastic behaviour of the lining. Closed-form solutions are only applicable with elastic properties. FE methods can incorporate non-linear stiffness and elasto-plastic behaviour.*

11.4.2 Lining section properties

NOTE *The segmental lining section is defined as the full thickness of the segments multiplied by the width considered in the modelling, usually 1 m.*

The designer should select one of the following methods to account for the segmented nature of the lining in terms of the rotational stiffness of the full ring.

a) The second moment of area of the full ring is reduced to consider the influence of the radial joints; this reduction is a function of the number of joints and the geometry of the joint contact face. This method is the only method applicable to closed-form solutions assuming linear-elastic behaviour of the ring and a single value of the moment of area is an input of such formulations (see **10.2.1.2.2**).

   NOTE *The contact face for a flat joint is nominally the full joint contact width as set out in* ***10.2.2****. The contact face for a convex-convex joint is traditionally assumed to be zero for the purpose of the calculation of the second moment of area of the ring.*

b) In 2D bedded beam spring and numerical models, the lining is represented by beam elements. While the approach set out in **11.4.2** a) is commonly used in these methods, the designer should consider the benefit of modelling the joints explicitly. The joints can be explicitly modelled introducing a local discontinuity in second moment of area at all joint locations while maintaining full sectional rotational stiffness properties for the rest of the ring. When flat joints are used, an upper value for the rotational stiffness should be chosen in order to obtain conservative results for the lining design. Lower bounds should be chosen to assess the deformation limits of the lining. When convex-convex joints are used, the rotation stiffness should be set equal to zero.

11.4.3 3D Modelling of tunnel linings

11.4.3.1 In 3D numerical models, including 3D spring models, the designer should model the lining using plate or shell elements.

NOTE 1 *3D solid elements can be used, but these need to be selected to allow an easy derivation of resolved forces and moments.*

NOTE 2 *The constitutive behaviour of both radial and circumferential joints is of great importance in 3D FE models to determine the expected joint behaviour as the tunnel deforms.*

11.4.3.2 When plate or shell elements are used, the designer should model the radial joints with the same recommendations proposed for 2D modelling in **11.4.2** b).

NOTE *Analysis of segmental linings using 3D solid elements allows the modelling of the full behaviour of radial and circumferential joints using contact (or interface) elements. This methodology is therefore generally more refined when compared to the modelling of the lining using beam or shell elements if the behaviour of the joints is governing the design. An example of a 3D model of a segmental lining with contact elements used at the joints is given in Figure 10.*

11.4.3.3 Where required in 3D numerical models, the designer should model the circumferential stiffness to account for the relative stiffness produced by the joint assembly system and any contact resistance through friction between segments, when friction can develop at the joints.

11.4.4 Modelling of local effects on segmental lining

The designer should carry out explicit modelling of the segment to check local effects at the joints coming from ram forces or bursting forces. Where necessary, the designer should include the non-linear material behaviour of the concrete (in particular if FRC segments are employed). A constitutive model with elasto-plastic properties should be defined as a stress-strain non-linear curve.

NOTE 1 *RILEM σ-ε methodology [NR4], TR63, or the fib* Model Code for Concrete Structures 2010 *[NR5] define a possible constitutive model to use in the FE analysis.*

NOTE 2 *Shell elements or solid elements can be used to provide a better understanding of the stress-strain behaviour of the concrete segments under concentrated loads to assess maximum tensile stresses, strains, crack location and expected width. Figure 11 shows the state of tensile stress (highlighted in red) in segments loaded with concentrated forces at the radial and the circumferential joint.*

11.5 Methods of analysis of ground structure interaction

The designer should select the approach to model the interaction between the ground and the lining from the list of methods set out in Figure 12.

NOTE *These methods are divided into several main categories, which are described in* ***11.6*** *and* ***11.7****.*

Figure 10 – Example of a 3D model of a segmental lining with contact elements used at the joints

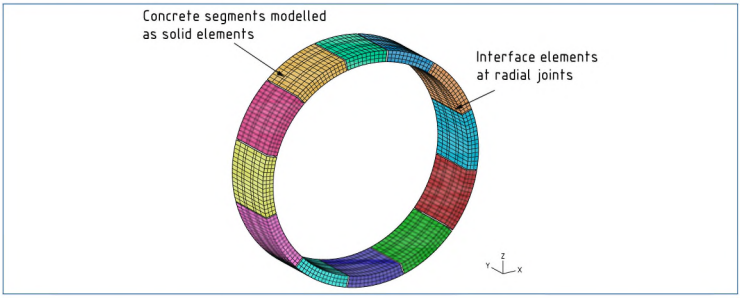

Figure 11 – State of tensile stress of radial and circumferential joints of a segmental lining

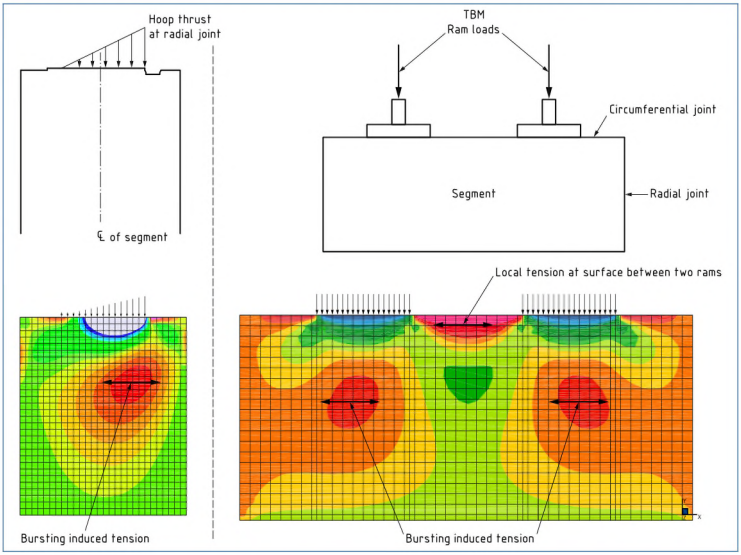

Figure 12 – Analysis methods for design of tunnels in soft ground

Method	Source/ example	Material models	2D or 3D	Time effects	Ground water effects[a]	Tunnel shape	Mined/ TBM
'Closed-form' analytical methods							
	Muir Wood, 1975 Curtis, 1976 Einstein and Schwartz, 1979 Duddeck and Erdman, 1985	Elastic, plastic, creep	2D	Creep in ground	Some	Circular	Both
CCM	Panet and Guenot, 1982	Elastic, plastic, creep	2D axisym	Creep, timing of support	No	Circular	Both
Bedded beam spring	ITA, 1998	Elastic	2D	None	No	Any	Both
Stability analyses	Mair and Taylor, 1993	Plastic	2D/3D	None	No	Circular	Both
Numerical methods							
FE	e.g. ABAQUS	All	2D/3D	All	Yes	Any	Both
FD	e.g. FLAC	All	2D/3D	All	Yes	Any	Both
FE/BE or FD/BE	e.g. PHASES Hoek et al., 1998	All but BE elastic only	2D/3D	All	Yes	Any	Both

Key	2D	two-dimensional analysis	Elastic	elastic material behaviour
	3D	three-dimensional analysis	Mined	drill and blast or driven heading
	axisym	axisymmetric analysis	Plastic	plastic material behaviour
	CCM	Convergence–Confinement Method	Some	some of the examples in the category/to some extent
	TBM	tunnel boring machine	Creep	creep material behaviour

[a] This column states whether the method provides any information on the effects of or on groundwater, for example porewater changes or consolidation settlements.

{SOURCE: BTS, Tunnel Lining Design Guide, 2004, p 101, modified [NR1]}

11.6 Analytical methods

11.6.1 General

When using analytical methods, the designer should assess and document their applicability with reference to the following key limitations:

a) inability to fully capture the ground-structure interaction in weak ground, where non-linear behaviour is significant;

b) mostly applicable to circular tunnel profiles;

c) a separate calculation of ground loading applied on the lining is needed (see **11.3**); and

d) the methods discount the redistribution of ground stresses between ground and lining by not considering that the ground continues to arch and redistribute load as the lining deforms. The use of analytical methods overestimates the load on the lining and underestimates the load transferred to the ground.

NOTE 1 *Segmental linings have traditionally been analysed using analytical methods such as closed-form solutions or bedded beam spring models. This PAS does not repeat the equations of those various closed-form solutions. For a suggested list of internationally-recognized closed-form solutions, see Annex B.*

Figure 13 – Typical continuum model

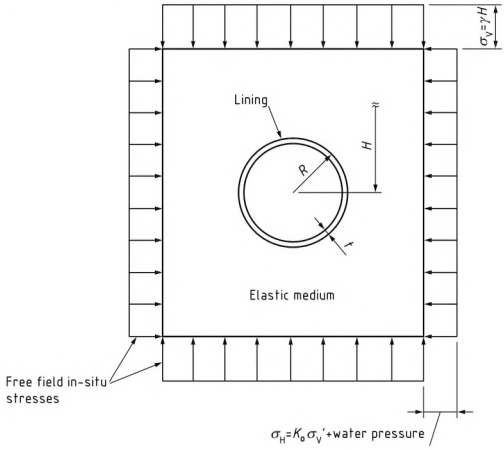

Key

H	Tunnel depth	R	Tunnel diameter
γ	Total unit weight of elastic medium (ground)	t	Lining thickness
K_0	Coefficient of earth pressure at rest	σ_v'	Effective vertical stress

NOTE 2 *Analytical methods for the design of tunnel support requirements are generally defined as 2D or 3D, closed-form theoretical solutions that assume a circular tunnel in an elastic or elastic-plastic homogenous continuum under static equilibrium.*

11.6.2 Continuum analytical solutions

The designer should carry out static analysis of the tunnel lining behaviour in soft ground using one of the internationally-recognized, closed-form solutions (see Annex B).

NOTE 1 *Continuum analytical solutions are theoretical models that are based on circular excavation and simultaneous installation of the lining in a stressed continuum, as shown in Figure 13. Based on the assumed loading condition and the ground-lining interactions, equations are established for calculating maximum thrust and moment in the lining. Both the loading and equivalent elastic properties of the ground are subject to a wide range of uncertainties, requiring sound design judgement when selecting these parameters.*

NOTE 2 *Guidance on analysis of tunnel lining in soft ground using continuum analytical solutions is given in BTS,* Tunnel Lining Design Guide *[NR1]. Additional details are given in ITA,* Guidelines for the Design of Tunnels *[NR6].*

11.6.3 Convergence-confinement method

For segmental lining design in soft ground, the designer should assess and document whether confinement pressure from the TBM is present prior to the installation of the lining. Where such confinement pressure is present, the designer should use full numerical modelling with the convergence-confinement method to model the state of stress induced on a lining installed in a pressurised environment.

NOTE 1 *An introduction to the use of the convergence-confinement method for segmental lining design is set out in Annex C.*

NOTE 2 *The closed-form formulation of the method provides an equation for the stiffness of the support system. The use of this equation with the ground reaction curve provides a simplified way to consider the convergence-confinement in tunnel lining design.*

11.6.4 Bedded beam spring models

11.6.4.1 The designer should carry out the analysis of tunnel linings in soft ground using bedded spring models in accordance with ITA, *Guidelines for the Design of Shield Tunnel Lining* [NR9] and ITA, *Guidelines for the Design of Tunnels* [NR6].

NOTE 1 *As illustrated in Figure 14, bedded beam spring models are action-reaction models that enable a simple analysis of a tunnel lining. Loads (e.g. ground and water pressures) are applied to the tunnel lining represented by a series of beam or shell elements, so a non-circular tunnel can be modelled and analysed. As the tunnel deforms under the applied load, only the springs in compression (representing the ground reaction) provide a passive reaction resulting in force equilibrium. No tension is permitted in the radial spring by introducing compression-only, non-linear springs.*

NOTE 2 *Bedded beam spring models are useful in all stages of design. However, it is advised that care be taken when used in detailed design as the beam spring model provides a rudimentary representation of ground-structure interaction. It is advisable to carry out a comparison analysis via the use of a continuum analytical solution (for circular tunnels) or full numerical analysis models (see* ***11.6.1 d)****).*

11.6.4.2 The designer should perform the analysis of the tunnel lining in accordance with the recommendations for limit state design in Clause **9** for the identified design situations and load combinations, including distributed or localized internal loads.

11.6.4.3 The designer should assess and document the need for more advanced modelling methods when the use of spring models results in convergence difficulties of the numerical solution.

NOTE *Convergence difficulties can occur due to the assumption of very soft ground stiffness or in the case of very high stress conditions.*

11.7 Numerical methods

NOTE 1 *Numerical analysis methods attempt to satisfy all theoretical requirements, include realistic ground and lining constitutive models and incorporate boundary conditions that more accurately simulate field conditions.*

NOTE 2 *Approaches based on finite difference (FD) and FE methods are most widely used for tunnel lining design. These methods involve a computer simulation of the full stress path from green field conditions, through to construction, and in the long term. Other methods such as the discrete element method (DEM) and boundary element method (BEM) are also available and can be superior to FE/FD methods in certain instances such as analysis of small-scale features or extremely complex geometries.*

NOTE 3 *The applicability of these methods is defined in the BTS,* Tunnel Lining Design Guide *[NR1].*

Figure 14 – Bedded beam spring model

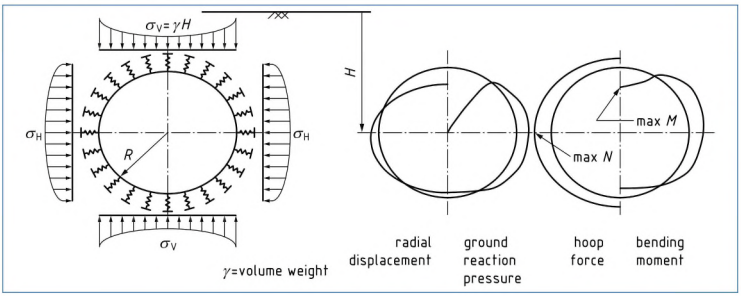

11.7.1 General modelling approach

The designer should undertake the following activities when conducting numerical analyses:

a) carry out a preliminary lining design using empirical and/or analytical methods, including high-level assumptions to simplify the problem;
b) define the objective of the modelling work and output requirements and plan the process of analysis;
c) select an appropriate form of analysis and software requirements;
d) define the ground stratigraphy and the most appropriate geotechnical constitutive model as well as governing groundwater behaviour (e.g. drained/undrained/time-dependent);
e) create a conceptual drawing of the analysis layout;
f) create the geometry and model the mesh including, where required, complex geometries;
g) apply boundary conditions and initial stress state in the ground prior to construction, giving particular attention to the in-situ stress ratio (K_o) and pore water pressure profile;
h) apply adjacent underground and above-ground structures (existing and under construction);
i) model the excavation;
j) model the installation of lining and selection of the most appropriate lining modelling methodology and structural constitutive model;
k) apply load variations and combinations in accordance with Clause **9**, with particular attention to the effects of high-imposed internal loads from a pressured water tunnel;
l) carry out an initial run and model validation using independent simplified calculations and case history data;
m) apply where applicable any intrusive mitigation works such as ground improvement/compensation grouting;
n) consider impacts from concurrent adjacent excavation and construction activities;
o) consider the effect of loads from/on existing structures and foundations;
p) consider the time-dependent behaviour of the ground and material parameters;
q) consider the effect of an applied surcharge load if required, at the appropriate stage; and
r) carry out independent reviews of the model and final validation using independent simplified calculations and calibration models.

11.7.2 Constitutive ground model

11.7.2.1 General

The designer should determine and document the most suitable constitutive ground models to simulate the behaviour of the ground.

NOTE *A comprehensive theoretical background regarding constitutive behaviour of ground for numerical analysis is given in Potts and Zdravkovic, "*Finite Element Analysis*" in Geotechnical Engineering [36], and Zdravkovic and Carter, "*Constitutive and numerical modelling*" in Geotechnique [37].*

11.7.2.2 Total and effective stress forms of analysis

When undertaking any numerical analysis for tunnel lining design in soft ground, the designer should determine the most appropriate mode of ground stress analysis with reference to the anticipated pore water pressure development/dissipation characteristics in the ground.

11.7.2.3 In-situ ground stress

The designer should initialize the effective in-situ ground stress around the tunnel location using the coefficient of earth pressure at rest, K_0.

NOTE 1 *As a consequence of the tunnel being formed, the horizontal effective stress falls such that the coefficient of earth pressure changes (often referred to as K_m, with $_m$ denoting 'mobilized'). The lining needs to accommodate this initial stress regime, and over time, a number of factors could influence how the stress regime might change. These include:*

- *horizontal stresses around the tunnel with time increasing towards at rest K_0 conditions; and*
- *change in groundwater pressure, either caused by pore pressure equalization following the formation of the tunnel or from the tunnel acting as a drain*

NOTE 2 *Figure 15 shows an image taken from a FE model of the K_0 or K_m conditions prior and following excavation of a tunnel in London Clay. Following formation of the tunnel, the coefficient of earth pressure can be seen to have dropped significantly at the tunnel axis level, while at the crown and invert it has significantly increased. This emphasizes the relaxation of horizontal stresses at axis level and effect of arching of stresses above and below the tunnel.*

Figure 15 – Coefficient of earth pressure change prior (i.e. at rest) and following tunnel construction (variation of horizontal stresses in kPa)

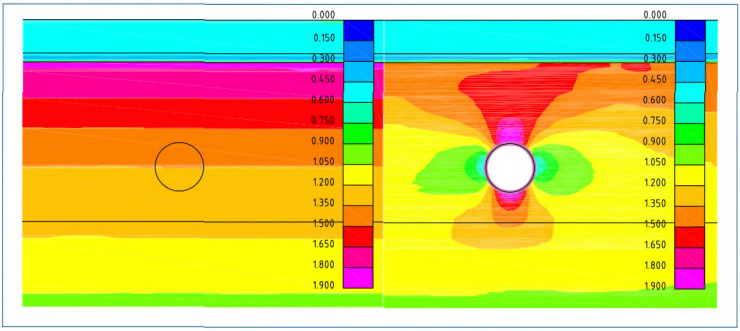

11.7.2.4 Stress reduction

The designer should determine the stress reduction parameters when a numerical analysis method is adopted for the design of the tunnel lining.

NOTE 1 *The most popular method to simulate the tunnel construction procedures is the "stress reduction method", often referred to as the λ-method, that allows simulation of the 3D tunnelling process with 2D models by reducing the initial stress around the tunnel perimeter. The approach to be used in conjunction with the convergence-confinement method is given in Annex C.*

NOTE 2 *The stress reduction calculation is often erroneously linked to volume loss. Volume loss is normally used for ground movement and building damage assessment, with the aim of generating the maximum expected ground movement. However, for lining design, the higher the ground convergence assumed (i.e. volume loss) the higher the stress reduction and, therefore, the less the load imposes on the lining. An approach that only assumes a high estimate of volume loss may not be conservative for lining design.*

11.7.3 Finite element (FE) and finite difference (FD) mesh geometry

For FE and FD models, the designer should select the appropriate mesh geometry to achieve:

a) an accurate geometrical representation of the structure and the ground;

b) the recognition that the mesh sizing at points of isolated loads or stress-concentrations might need to be finer to achieve accurate output;

c) the recognition that a coarser mesh might be appropriate at zones where construction is unlikely to change the pre-existing stress conditions;

d) the required level of numerical accuracy (e.g. the fineness of the mesh);

e) a realistic representation of stress/deformation changes during sequential stages;

f) a correct modelling of boundary condition (e.g. the use of infinite elements along the border or suitably large mesh such that the influence of the boundary is negligible).

NOTE 1 Additional *guidance of meshing requirements is given in the BTS,* Tunnel Lining Design Guide *[NR1] and NAFEMS publications available online at www.nafems.org.*

NOTE 2 A *typical FE model of a segmentally lined tunnel is shown in Figure 16.*

Figure 16 – Typical FE model of a segmentally lined tunnel

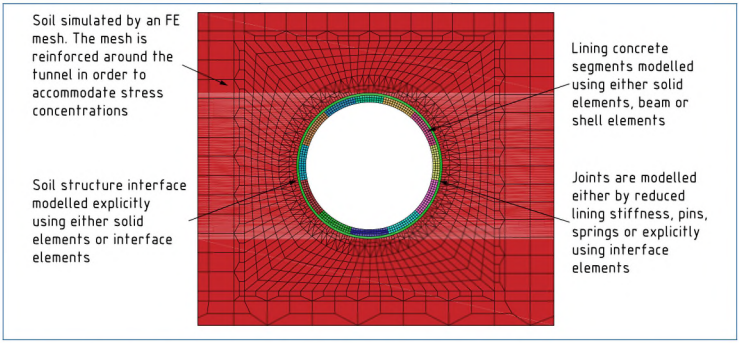

11.7.4 Special considerations for numerical modelling

11.7.4.1 Model calibration

The designer should calibrate any numerical model against independent information or calculations using:

a) simplified hand calculations using engineering first principles;

b) design calculations using analytical or empirical methods;

c) simplified numerical model (other than the actual model) that can be calibrated against other methods; and

d) back analysis of case history data from publications and conference proceedings of actual movements/measurements in similar ground conditions, with similar structures and construction.

11.7.4.2 Parameters to calibrate

During the calibration process of the numerical model the designer should investigate and document, as a minimum:

a) constitutive ground model;

b) drainage and groundwater flow;

c) ground stresses and ground reactions;

d) lining average hoop force; and

e) lining deformation profile and maximum distortions.

11.7.4.3 Ground creep and shrinkage/swelling

NOTE *Ground creep and shrinkage/swelling behaviour is a complex phenomenon typical, but not exclusive, to ground with a high content of clay minerals. Certain clay minerals swell or shrink significantly (up to 65% in volume) when subject to changes in water content.*

11.7.4.4 When undertaking analysis of the segmental lining in swelling or creeping ground the designer should assess and document long-term creep deformations of the lining, as well as additional swelling pressures as measured in laboratory tests.

11.7.4.5 When considering ground creep, the designer should use creep laboratory tests to calibrate advanced constitutive models.

NOTE *Consideration of the swelling and creep mechanisms for tunnel structures is covered in the US Department of Transportation* Technical Manual for Design and Construction of Road Tunnels – Civil Elements *[38].*

11.8 Junctions and interface with existing assets

11.8.1 Analysis principles for junctions

NOTE 1 *The design of junctions is considered to be one of the most challenging tasks in tunnel lining design in soft ground. This is due to the complex construction sequence and high proportion of ground-structure interaction, as well as the interaction between various structures often built using different construction methodologies and at different times.*

NOTE 2 *For segmental lining design, the most common case is the design of a junction between a segmental lining and a cross passage, which includes analysis of the stability of the segments next to the opening, temporary works for the cross passage excavation and the collar structure linking the segmental lining to the secondary lining of the cross passage.*

11.8.1.1 Due to the relatively high deformations and loads experienced by both the ground and lining, the designer should assess and document the non-linear, elasto-plastic behaviour of the ground and structure, and model the junction according to the findings.

11.8.1.2 Where temporary support is provided in the form of additional structural members inside the mainline tunnel, the designer should assess and document the benefit of modelling these temporary supports explicitly.

11.8.1.3 When designing junctions in weak water-bearing ground, the designer should specify ground improvement techniques as possible measures to allow the safe construction of the junction and provide additional restraint to the segmental lining close to a junction.

11.8.1.4 When designing the ground improvement techniques, the designer should carry out iterations and sensitivity checks. The designer should specify on-site verification of in-situ improved ground parameters. This should be carried out with sufficient time in advance of the construction to modify the design, if necessary.

11.8.1.5 When designing the junctions, the designer should allow flexibility in the design to cater for potential contingency measures to be applied.

11.8.1.6 When designing the junctions, the designer should optimize the geometry and size of the excavation and keep the opening size as small as possible for both operational and construction requirements.

11.8.1.7 The designer should take account of the excavations required during construction of the openings in the design of the segments.

11.8.2 2D plane stress analysis

The designer should assess and document whether a simplified 2D plane stress analysis conservatively represents the real situation of the junction and use this approach for the design of the junction. Where the simplified 2D plane stress analysis does not represent the real situation of the junction, the designer should use 3D methods.

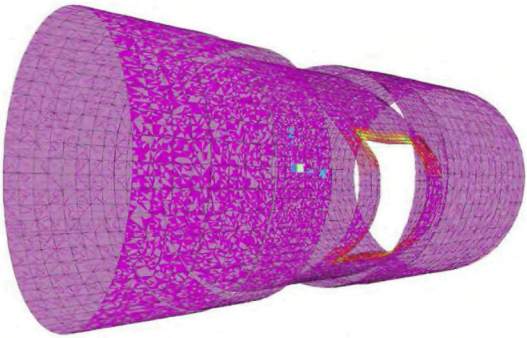

***NOTE** 2D analytical methods such as the 'hole-in-plate' Kirsch [39], Timoshenko [40], Roark [41] solutions or strut-and-tie models as well as 2D numerical solutions, provide a means for estimating the flow of stresses around a junction by reducing the geometry to a 2D plane stress projected solution. The 2D analytical method can be used to check feasibility of the junction design when reasonably conservative assumptions are set for the analysis. However, the 2D analytical method can have limited capability in considering complex stress flow and can be unable to provide integrated behaviour around the junction. The selection of a 2D or 3D approach is dependent on the complexity of the problem and is to be assessed by the designer on a project-specific basis.*

However, the 2D analytical method can have limited capability in considering complex stress flow and might be unable to provide integrated behaviour around the junction. The selection of a 2D or 3D approach is dependent on the complexity of the problem and is to be assessed by the designer on a project-specific basis.

11.8.3 3D bedded spring shell models

11.8.3.1 Where the results of the 2D analyses are not conclusive, the designer should carry out 3D analyses for the detailed design of a junction.

***NOTE 1** The use of 3D bedded spring shell models can be advantageous in the event of localized load discontinuities such as piled foundations close to the segmental lining.*

***NOTE 2** The use of 3D bedded spring shell models for junction design offers a significant benefit over 2D analytical and numerical solutions. Although limited in their ability to model ground-structure interaction, they are able to capture the full 3D load path in the lining, as well as estimate tunnel deformations and determine ground reactions. 3D bedded spring shell models can also be convenient to use in certain situations such as when full-slip is assumed at the ground-structure interface. They are much simpler and quicker to construct than full numerical analyses, and allow modelling of the structure in detail.*

11.8.3.2 When modelling openings, the designer should take into account the joints between the concrete segments or any temporary support that is provided to support the opening.

***NOTE 1** An example of a bedded spring shell model for an opening in a segmental lining with internal temporary support is given in Figure 17.*

***NOTE 2** For a drained excavation, seepage forces act on the perimeter of the excavation while the water pressure is reduced providing less overall confinement. Seepage analyses are usually carried out with simplified analytical methods or full numerical modelling and provide a key input to address the behaviour around the junction excavation.*

***NOTE 3** The interaction of the excavations can result in an extensive plastic zone. This plastic zone can result in significant non-linear behaviour and stiffness degradation, which can only be fully captured by 3D numerical modelling using advanced constitutive models.*

Figure 17 – Example of a bedded shell model for an opening in a segmental lining with internal temporary support

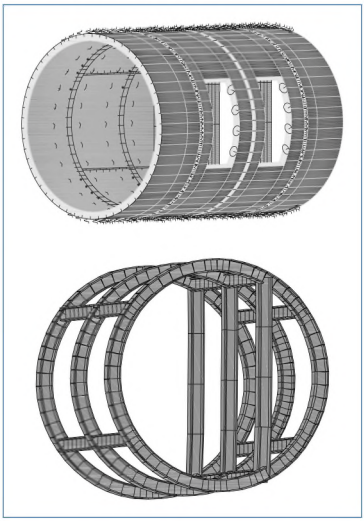

11.8.4 3D numerical models

***NOTE** 3D numerical models are ideal for modelling junctions and connections as they allow full representation of the complex geometry and the 3D stress path in the ground and lining, as well as simulating the significant ground-structure interaction. An example of a numerical model for a junction is given in Figure 18.*

When conducting 3D numerical analysis, the designer should follow the recommendations presented in **11.7**.

Figure 18 – Example of 3D FE model for junction

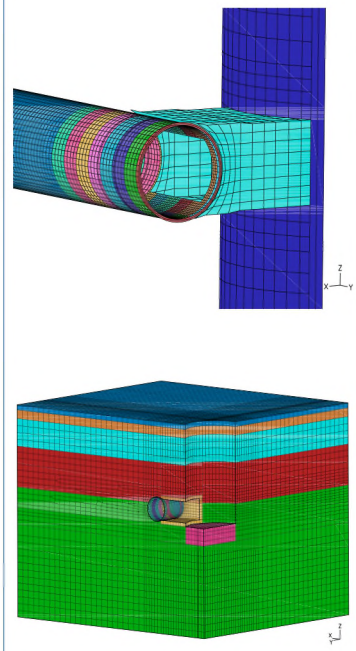

11.8.5 Effects of close proximity assets

When a new tunnel is constructed in the proximity of existing underground assets, the designer should verify whether there is a need to model the effects of the presence of the assets with numerical methods to account for the discontinuity in ground stresses applied to the lining of the new tunnel.

***NOTE** The change in ground loads and possibly water loads due to the presence of existing underground assets can impose significant asymmetric loading conditions on the lining. Closed-form solutions such as the Kirsch equations can provide an estimate of the maximum distance between the underground assets that can justify that the proximity of the assets is not critical for the lining design and that numerical modelling is not strictly required.*

11.9 Sensitivity analysis

11.9.1 General

11.9.1.1 The designer should carry out sensitivity or parametric studies for any selected method of analysis.

***NOTE 1** These allow for a deeper understanding of the design problem.*

***NOTE 2** Sensitivity studies account for the inherent variability in the input parameters and are aimed at achieving an optimized and safe design.*

11.9.1.2 The designer should carry out sufficient analyses to represent the full range of ground conditions encountered along the line of the tunnel.

***NOTE** Parametric studies are an integral part of the design process and are more relevant when the available information is not sufficient for the proposed lining or the information is statistically too variable.*

11.9.2 Parameters for sensitivity analyses

When carrying out parametric studies, the designer should investigate and document, as a minimum:

a) ground input parameters and constitutive behaviour;
b) groundwater behaviour;
c) ground loading;
d) coefficient of earth pressure;
e) other loads;
f) lining properties, geometry and constitutive behaviour;
g) lining interface behaviour;
h) assumed construction sequence;
i) construction tolerances; and
j) extreme design cases.

11.9.2.1 Ground input parameters and constitutive behaviour

When carrying out ground interaction modelling, and in particular full numerical analyses, the designer should investigate and document the sensitivity of the chosen constitutive model. This should include back-analysing laboratory and in-situ testing simulating the full stress path expected.

NOTE *Parameters to consider when undertaking numerical analysis include density, stiffness, over-consolidation ratio, permeability or any other parameter that affect the behaviour of the simulated ground material.*

11.9.2.2 Ground loading

The designer should investigate and document ground stress relaxation and stress arching values with different methods for all forms of analysis and for all methods of construction. Consideration for minimum and maximum ground loading at different stages of the life of the tunnel lining should be accounted for in the design to estimate all relevant load combinations.

11.9.2.3 Groundwater behaviour

The designer should investigate and document maximum and minimum possible water table levels and corresponding hydrostatic or transient water pressures as well as drained/undrained behaviour and tunnel drainage performance while taking into account the assumed construction sequence and assumed stress path.

11.9.2.4 Coefficient of earth pressure

Given the uncertainty of earth pressures throughout the construction period and in the long term, the designer should assess and document a lower and upper bound range of coefficient of earth pressures as part of the design.

11.9.2.5 Other loads

The designer should assess and document loads from nearby structures such as surface buildings, underground structures or foundations. Due to the fact that information from these structures is often limited, the designer should refer to available design criteria and carry out sensitivity interaction analyses.

NOTE *Available design criteria include London Underground and Network Rail standards.*

11.9.2.6 Lining properties

The designer should carry out parametric studies on the lining properties assumed during the construction and permanent load cases.

NOTE *It is advisable that the designer considers ring stiffness, variable concrete bearing strength (bursting check) and long- and short-term material properties in the sensitivity studies.*

11.9.2.7 Construction sequence

When carrying out the sensitivity study, the designer should design simple construction sequences that do not jeopardize constructability or undermine the project's economic benefits. The contractor should verify that the assumed sequence is in line with their proposed method of construction and verify the design to suit their proposed method of construction.

NOTE *In segmental lining design, the designer needs to verify how the staging of the stations and the sequence of the TBM drives could affect the state of stress in the segmental lining.*

11.9.2.8 Construction tolerances

The designer should assess the effects of the segmental lining installation tolerances in the analysis of the segmental lining for both full ring and joint behaviour.

11.9.2.9 Extreme design cases

NOTE *When carrying out analysis in variable ground conditions, the designer can consider the use of extreme as well as unrealistic cases to provide a means for ensuring the robustness of the analysis and identify failure mechanisms.* This *is particularly important in numerical analysis where issues with the ground constitutive model, groundwater behaviour or features are easily identified when extreme cases are investigated.*

12 Instrumentation and monitoring

When forming segmentally lined tunnels using TBMs, an appropriate review of the data generated by the TBM sensors should be carried out by suitably experienced staff.

NOTE 1 Guidance *for the review of this data to confirm that the tunnelling process is being progressed satisfactorily and in accordance with the intended design is given in BTS,* Closed-Face Tunnelling Machines and Ground Stability *[42].*

NOTE 2 *BTS,* Closed-Face Tunnelling Machines and Ground Stability *[42] considers in-tunnel instrumentation that is commonly used alongside the process of forming the tunnel lining. Further guidance on instrumenting the surface or nearby infrastructure and buildings as part of asset protection purposes can be found in BTS,* Monitoring Underground Construction – A best practice guide *[43].*

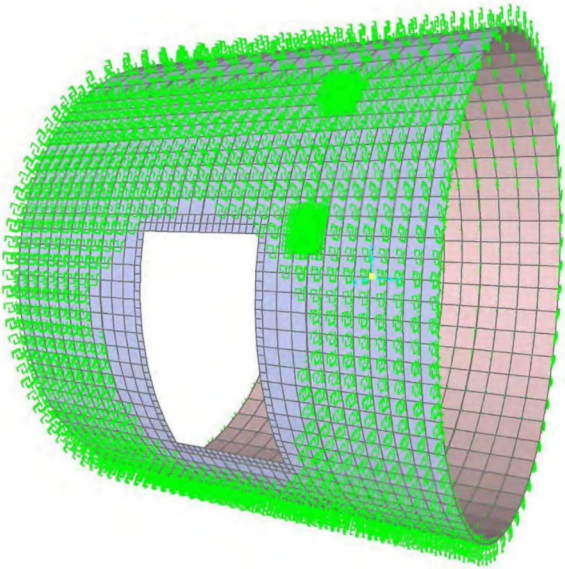

Annex A (normative) Design management

***NOTE** Guidance on management of the construction design process is given in BS 7000-4.*

A.1 Assessing designer's competence

The client should assess the designer's specific skill, knowledge and experience in respect of the tunnel lining design works of the project and hire a designer with the relevant skill, knowledge and experience to undertake the project.

***NOTE** For competent tunnel lining design, the designer needs knowledge in the areas of:*

a) ground-structure interaction;

b) concrete structure;

c) constructability (both methodology and materials); and

d) interface with adjacent assets (in terms of imposed loads and deformations).

A.2 Design approval/acceptance process

A.2.1 General

***NOTE** The objective of the approval/acceptance process is to achieve a multidisciplinary design that complies with the project's requirements.*

The designer should obtain progressive sign-off from the parties who are responsible for the design approval/acceptance, together with those who have an interface with the tunnel design to ensure the requirements are met at the various stages of the design approval/acceptance process so that the design can progress with certainty.

A.2.2 Process

A.2.2.1 If the client has their own design approval/acceptance process, then tunnel lining design should be carried out by the designer in accordance with the client's process.

A.2.2.2 If there is no available existing design approval/acceptance process, the designer should design the process to be as straightforward as possible to achieve a multidisciplinary design that complies with the project's requirements.

***NOTE 1** The design approval process is likely to be project-specific and depends on many factors including:*

a) who is responsible for the design (for example, design and construct or employer's design);

b) how the project requirements are defined;

c) the number of disciplines involved in the design;

d) the funding organization (government, PFI or private body);

e) the contractual arrangements (extent of partnering);

f) the extent of third party approvals required; and

g) the complexity of the design.

***NOTE 2** There is no recognized design approval/acceptance process specifically developed for tunnel lining design at the time of this PAS publishing. The Royal Institute of British Architects (RIBA) Plan of Work process has recently been adopted by some major tunnelling infrastructure projects in the UK for all design submissions and deliverables. The RIBA Plan of Work is an independent document from this PAS. At the time of publication of this PAS, the most up-to-date version of the RIBA Plan of Work is that published in 2013. For the detailed RIBA Plan of Work process, see:*

a) RIBA Plan of Work 2013 Overview *[44]; and*

b) Guide to Using the RIBA Plan of Work 2013 *[45].*

***NOTE 3** Another approval/acceptance process example is the six-stage Gate process shown in Annex D which can be considered as a model for the development of the design approval/acceptance process.*

A.3 Design checking

A.3.1 The design checking should be carried out by an independent organization or a competent in-house member of the client's organization (see **A.5.2**).

A.3.2 The level of design checking to be performed throughout the project should be proportionate to the level of risk and the complexity of the design.

NOTE 1 *More complex, higher-risk projects have more discrete design checks than less complex, lower-risk projects.*

NOTE 2 *An approach that has been adopted/adapted on many large infrastructure projects is based on the Highways England* Design Manual for roads and bridges – Part 1 BD 2/12 Technical Approval of Highway Structures *[46] (which supersedes BD 2/05, which is withdrawn).*

A.3.3 The checker should adopt the design check categories set out in Table A.1 for the tunnel lining's design checking, unless different design checking categories are specified in the client's project-specific document.

A.3.4 The information provided by the designer to the checker undertaking the design checking should include, where appropriate:

a) a design statement;
b) drawings;
c) specifications;
d) instrumentation and monitoring proposals;
e) risk assessments;
f) geotechnical factual information; and
g) emergency response plans or emergency preparedness plans.

NOTE *There is no need for the designer to provide their calculations to the checker for a category 2 or a category 3 check.*

A.3.5 The checker should submit the information as defined in the agreed deliverables list in addition to any design check certificates.

NOTE *The level of sufficiency of the design submission is determined by the approver, which could be the client, the contractor or other individual with the technical knowledge required to sign off the document, depending on the form or type of contract.*

Table A.1 – Suggested categories for tunnel lining design checking

Category	Checker	Applicable to
Category 1	Designs can be checked in the same group as that which prepared the design, but by a person other than the designer.	• Simple structures, designed using standard methods of analysis, or consisting of standard elements where the design of the elements has been previously checked. • Checking against design calculations and assumptions, and critically considering whether the base assumptions are valid.
Category 2	Designs can be checked in the designer's office by a separate group which has not been involved in the original design or by an independent organization.	• All works not included in Category 1, except those of a complex nature which are included in Category 3.
Category 3	Designs can be checked by an independent organization with the competence and resources to perform the check and to the acceptance of the project manager.	• Complex or unusual designs, and designs involving the following features: – high degree of redundancy; – high financial risks; – high health and safety risk; – high environmental pollution risks; – significant risk to third-parties; and – where required by a third party.

A.4 Design responsibilities for segmental tunnels

The client should meet, discuss with the designer and/or contractor, and allocate and document design responsibilities for the segmentally-lined tunnel, based on the project's contractual arrangements.

NOTE 1 *The design responsibilities can rest either with the design and build contractor or the employer's designer.*

NOTE 2 *When segmentally-lined tunnel lining design is undertaken by the employer's designer, the contractor's early engagement to refine the design to suit the individual contractor's particular requirements can be considered. This approach was used for High Speed 1 (Channel Tunnel Rail Link) and Crossrail1 projects.*

A.5 Design deliverables

A.5.1 The designer should submit deliverables to the client in line with the agreed approval/acceptance process (see **A.2.2**).

A.5.2 The client should select a competent individual (see **A.1**) from within their organization, or secure the services of professionals to review the design for conformance to the project requirements.

A.5.3 At the beginning of a project, the client, the designer and/or the contractor should determine and agree in writing the types and number of deliverables required at each stage to suit the project characteristics, the complexity of the project, the interfaces with external stakeholders and their individual requirements.

A.5.4 At the beginning of a project, the client and the designer should develop and agree in writing a hierarchy of documents such that the general requirements that are common to many design submissions are captured in one document and subsequent submissions reference the common documents.

NOTE *This avoids repetition of contents (i.e. cut and paste) in deliverables.*

A.5.5 The designer should submit the design in the optimum number of deliverables possible taking account of design approval/acceptance delay risk.

NOTE 1 *The client might ask for additional submissions from the designer before signing off the design.*

NOTE 2 *The complexity of managing the acceptance process tends to increases in proportion to the number of deliverables.*

A.6 Health and safety

Design management of tunnel lining design in health and safety aspects should be in accordance with:

a) BS 6164;

b) BS EN 16191; and

c) BS EN 12110.

NOTE *Attention is also drawn to the CDM Regulations 2015 [1].*

A.7 Commenting

***NOTE** A good process for review, commenting, responding to comments and closure of comments is a key part of the acceptance process. The complexity of this depends on the number of stakeholders present.*

A.7.1 The client should review and comment on the deliverables throughout the project prior to acceptance or approval.

***NOTE** This can also be undertaken by an independent checker employed by the client.*

A.7.2 The designer should review the client's comments on the deliverables and update the deliverables documentation accordingly.

***NOTE** It is important that a revision history is kept, as comments on the deliverables are an important record that hold the background and context to any change or agreement.*

A.7.3 The final design documentation compiled by the designer at the detailed design stage should include a comment tracker sheet that identifies all the comments that have been made throughout the project and how they have been addressed by the design. Each comment should be signed off by the commenter and a record of the sign off should be kept.

A.8 Meetings and communications

***NOTE** It is not necessary to conduct face-to-face meetings with the client if an alternative communication method is agreed.*

A.8.1 The designer should propose and agree in writing with the client a meeting schedule and/or means of communication for progress updates during the course of each project stage.

***NOTE** A comprehensive progress update meeting might cover, as a minimum:*

a) the viability of tunnel design options;

b) the cost and schedule of each tunnel design option;

c) any technical challenges and critical assumptions associated with each tunnel design option; and

d) review of risk register.

A.8.2 Where major changes or critical challenges are identified during the course of each project stage, the designer should organize additional meetings and/or arrange additional communications with the client.

A.9 Building Information Modelling (BIM)

A.9.1 In accordance with PAS 1192-2, the client should provide a clear definition of the employer's information requirements to enable designers and contractors to produce and deliver consistent permanent works information.

A.9.2 The client should define standards, methods and protocols to be used to ensure that the information received meets requirements, is of sufficient quality, and can be shared with other parties.

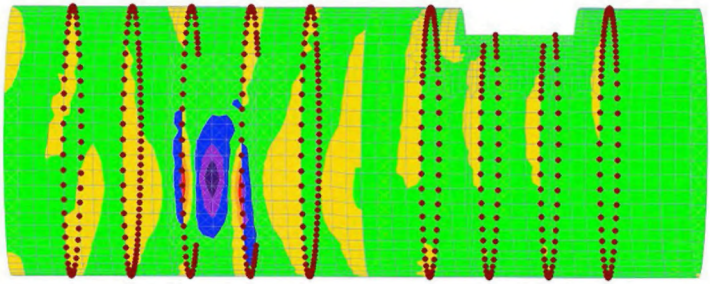

Annex B (informative) Closed-form solutions for static analysis of tunnel lining in soft ground

Table B.1 contains a summary of the closed-form solutions suggested for the static analysis of a tunnel lining in soft ground with associated advantages and disadvantages. See **11.5** and **11.6** for further details.

Table B.1 – Closed-form solutions for static analysis of tunnel lining in soft ground

Method	Advantages	Disadvantages
Duddeck and Erdmann (1985) [47]	• Simple • Derived from a comparison of all preceding equations	• Circular cross-section assumed • Need to derive distortional loads from effective stresses, then add water • Support wished-inplace • Elastic • Empirical correction for joints (can also be considered an advantage)
Einstein and Schwartz (1979) [48]	• Accounts for lining/joint flexibility • Considers the relative stiffness between the ground and lining • Can model either external loading or excavation unloading conditions • Well suited to preliminary design and design adaptation during construction	• Circular cross-section assumed • Need to derive distortional loads from effective stresses, then add water • Elastic • Support wished-inplace • Contradiction with the assumption of plane strain
Muir-Wood and Curtis (1976) [49]	• Simple • Easy to follow mathematical derivation	• Circular cross-section assumed • Need to derive distortional loads from effective stresses, then add water • Support wished-inplace • Elastic • Empirical correction for joints (can also be considered an advantage)

NOTE *The original equations of the closed form solutions set out in Table B.1 are presented for coefficient of earth pressure at rest $K_0 \leq 1.0$. It is advised that care be taken when $K_0 > 1.0$, as the original equation needs to be modified to suit the ground loading condition.*

Annex C (informative) Convergence-confinement method (CCM) in segment lining design

C.1 General

The convergence-confinement method provides a relationship between the state of stress around an excavated profile as a function of the radial convergence.

This information is collected in the ground reaction or GRC. Longitudinal displacement profile and GRC as illustrated in Figure C.1 are required to relate deformations of the excavated tunnel wall at successive stages in the analysis to the actual physical location along the tunnel axis. This provides a percentage of the in-situ load that is acting on the lining at any point from the face and in particular at the distance where the lining is installed (point with radial deformation u_{so}). This percentage at a predefined distance from the face, such as the point of installation of the lining for a TBM tunnel, is defined as the ground relaxation factor (λ).

The ground reaction curve can be used in conjunction with the support characteristic curve. The latter provides the internal support pressure that can be carried by the lining when the lining is installed. The use of the closed-form solutions provide a simplified method to obtain an estimate of ground loads with the convergence-confinement method approach.

When equilibrium is reached between the two curves as shown in Figure C.1, the pressure acting on the tunnel lining can be calculated as the pressure at equilibrium. This value is lower than the in-situ stress and the so called critical support pressure, p_{cr} (which is the state of stress of the ground when the tunnel is installed and is equal to (1-λ) multiplied by the in-situ stresses).

Further details on the use of the convergence-confinement method for tunnel lining design are given in AFTES, Recommendations on the convergence-confinement method [50].

Due to the theoretical formulation of the convergence-confinement method, the ground-lining interface is not explicitly accounted for and full-bond is implicitly assumed.

A significant disadvantage of the convergence-confinement method as formulated using analytical solutions is the inherent assumption that K_0 =1. The designer needs to consider this limitation during design.

Figure C.1 – Convergence-confinement method – Longitudinal displacement profile (LDP) and ground response curve (GRC) with support characteristic curve

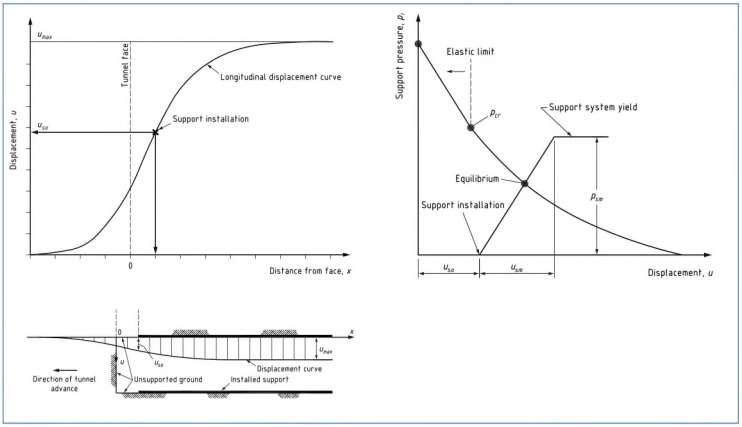

C.2 Applicability of the convergence-confinement method in numerical modelling

The designer can determine the stress reduction parameters (the ground relaxation factor) by means of the convergence-confinement method and apply this factor in the numerical analysis method for the design of tunnel lining as illustrated in Figure C.2.

Partial convergence of the cavity takes place before the primary lining is installed. Throughout the excavation process, the stress or the pressure around the cavern perimeter, (σ_r) is given by $\sigma_r = (1 - \lambda)\ \sigma_0$ with λ varying between 0 (no stress release) and 1 (complete stress release). Once the tunnel lining is installed, the final stage is run with a λ factor of 1 to model the application of the remaining of the ground stresses.

One of the main factors affecting the results of the numerical model is the stress-reduction factor (λ). The λ-factor depends on:

a) the ratio of the unsupported tunnel length to the tunnel diameter;

b) the ground profile and mechanical behaviour; and

c) the presence of inner confining pressure (the TBM case).

High λ-factor occurs with large round lengths and/or late installation of tunnel lining.

High λ-factor corresponds to a large component of the in-situ stresses to be redistributed in the ground mass. Therefore, ground deformation would be relatively large whilst structural forces in the lining would be relatively low. Vice-versa a smaller λ factor leads to smaller ground deformations and larger structural forces in the lining. This is the conceptual reason why design for an upper bound volume loss is not conservative as this provides the maximum allowed deformation and therefore a lower bound stress regime on the lining.

This stress reduction method is regularly used in the design of mined open-face circular or semi-circular tunnels, where the lining installation occurs in stages in relatively close proximity to the face (typically 1 m to 3 m). The same mechanical behaviour is applicable to a TBM tunnel, but the lining installation occurs much further from the face (typically 10 m to 12 m). In order to limit ground movements, closed-face TBMs can maintain pressure at the face and within the annulus around the shield. The presence of the TBM face and annulus pressure needs to be accounted for when calculating the ground relaxation factor and running the numerical models.

Figure C.2 – Stress reduction method, conceptual sketch

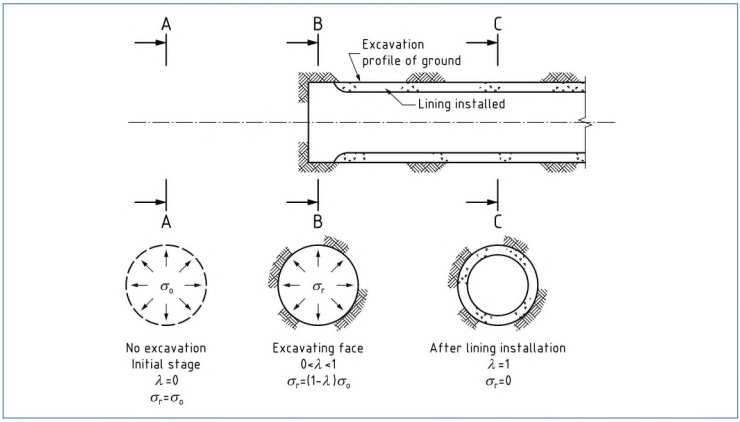

Annex D (informative) Six-stage Gate process

NOTE 1 *The six-stage Gate process, which might be considered as a model for the development of the design approval/acceptance process, is set out in Table D.1.*

NOTE 2 *Depending on the type of contract, there may be interim stages in the six-stage Gate process. Examples include a Design and Construct (D&C) contract where a Gate 2 and Gate 4 design submission prepared by contractor's designer is reviewed within the D&C organization and require the contractor's acceptance before it is submitted formally into the Gate approval process.*

Table D.1 – Suggested six-stage Gate process for tunnel lining design

Gate	Design/construction stage	Purpose
Gate 1	Planning	Develop design management plan including approaches, organization and schedule of deliverables
Gate 2	Conceptual design	Demonstrate compliance with design requirements and obtain acceptance of the input parameters including, design criteria, design working life, space proofing and interfaces with other disciplines (this is equivalent to an AIP submission for some existing infrastructure clients). Prior to the formal submission a single disciplinary review (SDR) followed by an interdisciplinary review (IDR) would be appropriate to demonstrate that an integrated multi-disciplinary design has been developed
Gate 3	Developed design	This is project-specific and depends on whether a more developed concept is needed to obtain sign off from third parties before proceeding to Gate 4
Gate 4	Detailed design	This includes full sets of calculations, and design and check certificates. It includes or references all the information required for construction. Some documents such as specifications can only be submitted at a Gate 4 stage. An SDR and an IDR are also appropriate at this stage
Gate 5	Construction stage	Address any issues raised on the Gate 4 submission
Gate 6	Post-construction stage	This involves as-constructed information, operation and maintenance manuals

Bibliography

Standards publications

For dated references, only the edition cited applies. For undated references, the latest edition of the referenced document (including any amendments) applies. BES 6001, Framework standard for the responsible sourcing of construction products

BS 7000-4:2013, *Design management systems – Part 4: Guide to managing design in construction*

BS EN 1991-1-1:2002, *Eurocode 1 – Actions on structures – Part 1-1: General actions – Densities, self-weight, imposed loads for buildings*

BS EN 1992-1-2:2004, *Eurocode 2 – Design of concrete structures – Part 1-2: General rules – Structural fire design*

BS EN 1997-2, *Eurocode 7: Geotechnical design – Part 2: Ground investigation and testing*

BS EN 1998-1, *Eurocode 8: Design of structures for earthquake resistance – Part 1: General rules, seismic actions and rules for buildings*

BS ISO 15392, *Sustainability in building construction – General principles*

BS EN 15804, *Sustainability of construction works – Environmental product declarations – Core rules for the product category of construction products*

BS EN 15978, *Sustainability of construction works – Assessment of environmental performance of buildings – Calculation method*

BS EN ISO 22475-1, *Geotechnical investigation and testing – Part 1: Sampling methods and groundwater measurements – Technical principles for execution*

NA to BS EN 1990:2002+A1:2005, *UK National Annex to Eurocode – Basis of structural design*

NA to BS EN 1997-2:2007, *UK National Annex to Eurocode 7 – Geotechnical design – Part 2: Ground investigation and testing*

NA+A1:2014 to BS EN 1997-1:2004+A1:2013, *UK National Annex to Eurocode 7 – Geotechnical design – Part 1: General rules*

PD 6682-1, *Aggregates – Part 1: Aggregates for concrete – Guidance on the use of BS EN 12620*

PD 6682-4, *Aggregates – Part 4: Lightweight aggregates for concrete, mortar and grout – Guidance on the use of BS EN 13055-1*

Other publications

[1] GREAT BRITAIN. Construction (Design and Management) Regulations 2015. London: The Stationery Office

[2] GREAT BRITAIN. Construction Products Regulations 2013. London: The Stationery Office

[3] GREAT BRITAIN. Health and Safety at Work etc. Act 1974. London: The Stationery Office.

[4] INTERNATIONAL TUNNELLING ASSOCIATION (ITA). Guidelines for structural fire resistance for road tunnels. Lausanne, Switzerland: Working Group No.6, Maintenance and Repair, 2004

[5] World Road Association (PIARC). Road Tunnels Manual, World Road Association. Paris: PIARC, 2011

[6] EUROPEAN COMMISSION. EU No 1303/2014 concerning the technical specification for interoperability relating to 'safety in railway tunnels' of the rail system of the European Union. Luxembourg: Official Journal of the European Union, 2014

[7] EUROPEAN FEDERATION OF NATIONAL ASSOCIATIONS REPRESENTING FOR CONCRETE. Specification and guidelines for testing of passive fire protection for concrete tunnels linings. Norfolk, UK: EFNARC, 2009

[8] BRITISH TUNNELLING SOCIETY (BTS) and The Association of British Insurers. Joint Code of Practice for Risk Management of Tunnel Works in the UK. London: The British Tunnelling Society, 2003

[9] HOEK, E. and BROWN, E.T. Underground Excavations in Rock. London: Institution of Mining and Metallurgy, 1980

[10] FRANKLIN, J.A. and DUSSEAULT, M. B. Rock Engineering Applications. New York: McGraw-Hill Professional, 1989

[11] HUDSON, J. A. and HARRISON, J. P. Engineering Rock Mechanics – An introduction to the Principles. Oxford: Elsevier, 1997

[12] PERRY, J. and WEST, G. Sources of Information for Site Investigations in Britain, Report 192 (Revision of TRL Report LR 403). Crowthorne, UK: Transport Research Laboratory, 1996

[13] MUIR WOOD, A. Tunnelling: Management by Design. E & F N Spon, London and New York, 2000

[14] CLAYTON, C. R. I., SIMONS, N. E. and MATTHEWS, M. Site Investigations, Granada Technical Books, Manchester, 1982

[15] MAYNE, P.W. and KULHAWY, F.H. Ko-OCR Relationships in Soil. *In: Journal of the Geotechnical Engineering Division*. VA, USA: American Society of Civil Engineers, 1982, Vol. 108, GT6, pp. 851-872

[16] SIMPSON, B. Retaining Structures: Displacement and design. 32nd Rankine Lecture. *In: Geotechnique,* 1992, pp 541-576

[17] ESSEX, R. J. Geotechnical Baseline Reports for Underground Construction, Guidelines and Practices. Reston, Virginia: American Society of Civil Engineers, 1997

[18] SIMPSON, B. and DRISCOLL, R. Eurocode 7 – A commentary. Watford, UK: Construction Research Communications Ltd, 1998

[19] BAMFORTH, P.B, Enhancing reinforced concrete durability, Technical Report No.61. Camberley, UK: Concrete Society, 2004

[20] BRE Construction Division. Concrete in aggressive ground. Bracknell, UK: BRE, 2005

[21] CONCRETE SOCIETY (CS). Technical Report No.63, Guidance for the design of steel-fibre-reinforced concrete. Camberley, UK: CS, 2007

[22] CONCRETE SOCIETY (CS). Guidance on the use of macro-synthetic-fibre-reinforced concrete, Technical Report No.65. Camberley, UK: CS, 2007

[23] BARROS, J.A.O., CUNHA, V.M.C.F., RIBEIRO, A.F., ANTUNES, J.A.B. Post-cracking behaviour of steel fibre reinforced concrete. RILEM, *In: Materials and Structures* 38, 2005, pp. 47-56

[24] LONDON UNDERGROUND. Standard 1055, Civil Engineering – Deep Tube Tunnels and Shafts. London: London Underground, 2011

[25] HIGHWAYS ENGLAND. Design Manual for Roads and Bridges, Volume 2, Highway Structures Design (Substructures and Special Structures) Materials, Section 2 Special Structures, Part 9, BD 78-99 Design of Road Tunnels. UK: Highways Agency, Stationery Office, 1999

[26] INSTITUTION of CIVIL ENGINEERS. Sprayed concrete linings (NATM) for tunnels in soft ground, ICE design and practice guides. London: ICE, 1996

[27] ASSOCIATION FRANCAISE DES TUNNELS ET DE L'ESPACE SOUTERRAIN (AFTES). Recommendations for the design, sizing and construction of precast concrete segments installed at the rear of a tunnel boring machine (TBM). Paris, France: AFTES, 1997 (translated to English in 1999)

[28] ACI COMMITTEE 544. Report on Design and Construction of Fiber-Reinforced Precast Concrete Tunnel Segments, 544.7R-16. Farmington Hills, MI: ACI, 2016.

[29] JAPANESE SOCIETY OF CIVIL ENGINEERS (JSCE). The design and construction of underground structures (in Japanese), Japan Society of Civil Engineers, Tokyo, Japan, 1977

[30] BLOM, C.B.M. Design Philosophy of Concrete Linings for Tunnels in Soft Soils, Ph.D. thesis, Technical Univ. of Delft, DUP Science, Delft, Netherlands, 2000

[31] MORGAN, H. D. A contribution to the analysis of stress in a circular tunnel. *In: Geotechnique* 11, 1961, No.3, pp. 37-46

[32] MUIR WOOD, A. The circular tunnel in elastic ground. *In: Geotechnique* 25 (1), 1975, 115-127

[33] LEONHARDT, F. Prestressed concrete design and construction, Chapter 9, Berlin: Wilhelm Ernst & Shon, 1964

[34] SZECHY, K. The Art of Tunnelling. Budapest, Hungary: Akadémiai Kiado, 1970

[35] TERZAGHI, K. Theoretical Soil Mechanics. London: J Wiley and Sons, 1943

[36] POTTS, M., ZDRAVKOVIC, L. Finite Element Analysis in Geotechnical Engineering, Thomas Telford, 1999

[37] ZDRAVKOVIC, L., CARTER, J, Contributions to Geotechnique 1948-2008: Constitutive and numerical modelling. *In: Geotechnique*, Vol: 58, 2008, pp. 405-412

[38] US DEPARTMENT OF TRANSPORTATION, FEDERAL HIGHWAY ADMINISTRATION, FHWA-NHI-10-034, Technical Manual for Design and Construction of Road Tunnels – Civil Elements. Washington, D.C., U.S.A: US Department of Transportation, 2009

[39] KIRSCH, G. Die theorie der elastizitat und die bedurfnisse der festigkeitslehre. *In: Verein Deutsche Ingenieure*, Vol. 42, 1898, pp. 797-807

[40] TIMOSHENKO, S.P. and WOINOWSKI-KRIEGER, S. Theory of Plates and Shells, 2nd ed., McGraw-Hill, New York, 1959

[41] ROARK, R. J. and YOUNG, W. C. Formulas for Stress and Strain, 5th ed. New York, USA: McGraw-Hill, 1975

[42] BRITISH TUNNELLING SOCIETY. Closed-face tunnelling machines and ground stability, Thomas Telford Books, London, 2005

[43] BRITISH TUNNELLING SOCIETY. Monitoring Underground Construction – A best practice guide, ICE Publishing, London, 2011

[44] ROYAL INSTITUE OF BRITISH ARCHITECTS. RIBA Plan of Work 2013 Overview, RIBA, London, 2013

[45] ROYAL INSTITUE OF BRITISH ARCHITECTS. Guide to Using the RIBA Plan of Work 2013, RIBA Publishing, London, 2013

[46] HIGHWAYS ENGLAND. Design Manual for roads and bridges – Part 1 BD 2/12 Technical Approval of Highway Structures UK: Highways Agency, Stationery Office, 2012

[47] DUDDECK, H. and ERDMANN, J. On structural design models for tunnels in soft soil. *In: Underground Space*, Vol.9, 1985, Pergamon Journals Ltd, USA, pp. 246-259

[48] EINSTEIN, H.H., and SCHWARTZ, C.W. Simplified analysis for tunnel supports. *In: Journal of the geotechnical engineering division*. New York: American Society of Civil Engineers, Vol. 105, 1979, GT4, pp. 499-518

[49] MUIR-WOOD and CURTIS, D.J. Discussion on the circular tunnel in elastic ground. *In: Geotechnique*, Vol. 26, 1976, No. 1, pp. 231-237

[50] ASSOCIATION FRANCAISE DES TUNNELS ET DE L'ESPACE SOUTERRAIN (AFTES). Recommendations on the convergence-confinement method. Paris, France: AFTES, 2001

Further reading

ANAGNOSTOU, G. and KOVARI, K. Face Stability Conditions with Earth-Pressure-Balanced Shields. *In: Tunnelling and Underground Space Technology*, 1996, Volume 11, No. 2.: 165-173.

ASSOCIATION OF GEOTECHNICAL AND GEOENVIRONMENTAL SPECIALISTS. Electronic Transfer of Geotechnical and GeoEnvironmental. Data Version, Fourth Edition. Kent: AGS, 2011.

BLOCKLEY, D. I. The New Penguin Dictionary of Civil Engineering. London: Penguin Books, 2005.

BS 6100-3:2007, *Building and civil engineering – Vocabulary – Part 3: Civil engineering – General*

BS EN 12715:2000, *Execution of special geotechnical work – Grouting*

BS EN 12716:2001, *Execution of special geotechnical work – Jet grouting*

BS EN 14487-1:2005, *Sprayed concrete – Part 1: Definitions, specifications and conformity*

BS EN 14487-2:2006, *Sprayed concrete – Part 2: Execution*

BS EN 14488-3:2006, *Testing sprayed concrete – Part 3: Flexural strengths (first peak, ultimate and residual) of fibre reinforced beam specimens*

BS EN 14488-5:2006, *Testing sprayed concrete – Part 5: Determination of energy absorption capacity of fibre reinforced slab specimens*

BS EN 1991-1-2:2002, *Eurocode 1: Actions on structures – Part 1-2: General actions – Actions on structures exposed to fire*

BS EN 1992-3:2006, *Eurocode 2: Design of concrete structures – Part 3: Liquid retaining and containment structures*

BS EN 1994-1-1:2004, *Eurocode 4: Design of composite steel and concrete structures – Part 1-1: General rules and rules for buildings*

BS EN 934-5:2007, *Admixtures for concrete, mortar and grout – Part 5: Admixtures for sprayed concrete – Definitions, requirements, conformity, marking and labelling*

CHANG, Y. and STILLE, H. *Influence of early age properties of shotcrete on tunnel construction sequences, Shotcrete for Underground Support VI, Proceedings of the Engineering Foundation Conference, Niagara-on-the-Lake, Canada*. New York: American Society of Civil Engineers, 1993.

CHEUNG, K., WEST, K., YEOW, H.C. and SIMPSON, B. Do Eurocodes make a difference? *In: Geomechanics and Tunnelling*, 2010, Vol. 3, No. 1: 35-47.

CUR. *Recommendation 111 Steel fibre reinforced concrete industrial floors on pile foundations – Design and construction*. Netherlands, 2010.

DAUB. Recommendations for the Design, Production and installation of Segmental Rings. DAUB: Cologne, 2013.

DAVIS, E.H., GUNN, M.J., MAIR, R.J. and SENEVIRATNE, H.N. The stability of shallow tunnels and underground openings in cohesive material. *In: Geotechnique*, 30, 1980, No. 4: 397-416.

DEUTSCHER AUSSCHUSS FÜR STAHLBETON. Technical Rule on Steel Fibre Reinforced Concrete Draft. Berlin: DafStb, 2012.

EUROPEAN FEDARATION OF NATIONAL ASSOCIATIONS REPRESENTING FOR CONCRETE. European Specification for Sprayed Concrete. EFNARC, 1996.

FANG, Y.S., LIN C.T., LIU, C., CHENG, K.H., SU, C.S., CHEN, T.J. Construction of a Cross Passage between Two MRT Tunnels. Proceedings of the 18th International Conference on Soil Mechanics and Geotechnical Engineering. Paris, 2013.

GABA, A.R., SIMPSON, B., POWRIE, W., and BEADMAN, D.R. Embedded retaining walls – guidance for economic design. C580. London: CIRIA, 2003.

HARDING, A., CHAPPELL, M., BURDICK, M., KRULC, M. Opening supports to segmental linings: A novel shotcrete support solution. *In: Mining Engineering*, 2014, Volume 66, No. 6: 102-102.

HOEK, E., CARRANZA-TORRES, C., DIEDERICHS, M.S., and CORKUM, B. Integration of geotechnical and structural design in tunnelling. Proceedings University of Minnesota 56th Annual Geotechnical Engineering Conference. Minneapolis, 2008, 1-53.

INTERNATIONAL TUNNELLING ASSOCIATION. General report on conventional tunnelling, ITA Working Group on Conventional Tunnelling. ITA Report No.002, 2009.

INTERNATIONAL TUNNELLING ASSOCIATION. ITA Report – Shotcrete for Underground Support: a State-of-the-art Report with Focus on Steel-fibre Reinforcement. *In: Tunnelling and Underground Space Technology*, 1992, Volume 7, No. 4: 388-391.

INTERNATIONAL TUNNELLING ASSOCIATION. ITAtech Design Guidance for Sprayed Applied Waterproofing Membranes. ITAtech Activity Group – Lining and Waterproofing, ITAtech Report No.2, 2013.

INTERNATIONAL TUNNELLING ASSOCIATION. ITAtech Design Guidance for Precast Fibre Reinforced Concrete Segments. ITAtech Activity Group Support, ITAtech Report No.7, 2015.

JOHN, M., and MATTLE, B. Design of tube umbrellas. *In: Magazine of the Czech Tunnelling Committee and the Slovak Tunnelling Association*, 2002, Volume 11, No. 3.

KLAPPERS, C., GRÜBL, F. OSTERMEIER, B. Structural analyses of segmental lining - coupled beam and spring analyses versus 3D-FEM calculations with shell elements. *In: Tunnelling and Underground Space Technology*, 2006, Volume 21: 254-255.

LAWRENCE, C., TAYLOR, J. Design of tunnel cross-passages. RETC, 2011: 119-136.

LECA, E., and DORMIEUX, L. Upper and lower bound solutions for the face stability of shallow circular tunnels in frictional material. *In: Geotechnique*, 48, 1990, No 4: 581-606.

LUNARDI, P. The design and construction of tunnel using the approach based on the analysis of controlled deformation in rocks and soils. Tunnel and Tunnelling International special supplement, ADECO-RS approach, May 2000.

OWEN, G.N. SCHOLL, R.E. Earthquake engineering of large underground structures, Report no. FHWA/RD-80/195. Federal Highway Administration and National Science Foundation, 1981.

PREENE, M., ROBERTS, T.O.L., POWRIE, W., and DYER, M.R. Groundwater control – design and practice. C515. London: CIRIA, 2002.

RABCEWICZ, L., V. Patentshrift, Oesterreichisches Patent Nr. 165573 (Patent Entry, Austrian Patent Nr. 165573, 1948), 1948.

RABCEWICZ, L.,V. GLOSER J. Principles of Dimensioning the Supporting System for the New Austrian Tunnelling Method. IPC Electrical Electronic Press Limited: Water Power, 1973.

RABCEWICZ, L.,V. The New Austrian Tunnelling Method. IPC Electrical Electronic Press Limited: Water Power, 1964.

RAWLINGS, C.G., HELLAWELL, E.E., and KILKENNY, W.M. Grouting for ground engineering. C514. London: CIRIA, 2000.

SHIN, J.H., POTTS, D.M. Time-based two dimensional modelling of NATM tunnelling. *In: Canadian Geotechnical Journal*, 2002, Volume 39: 710-724.

SIMPSON, B. Approaches to ULS design – The merits of Design Approach 1 in Eurocode 7. ISGSR2007 First International Symposium on Geotechnical Safety & Risk: Shanghai Tongji University, China, 2007.

SIMPSON, B. Retaining Structures: Displacement and design. 32nd Rankine Lecture. *In: Geotechnique*, 1992: 541-576.

SOMERVILLE, S.H. Control of groundwater for temporary works – R113. London: CIRIA, October 1986.

SPYRIDIS, P., NASEKHIAN, A., SKALLA, G. Design of SCL structures in London. *In: Geomechanics and Tunnelling*, 6, 2013, No.1.

TERZAGHI, K. Stress distribution in dry and in saturated sand above a yielding trap-door. Proceedings, First International Conference on Soil Mechanics and Foundation Engineering: Cambridge, Massachusetts, 1936: 307-311.

British Standards Institution (BSI)

BSI is the national body responsible for preparing British Standards and other standards-related publications, information and services.

BSI is incorporated by Royal Charter. British Standards and other standardization products are published by BSI Standards Limited.

About us

We bring together business, industry, government, consumers, innovators and others to shape their combined experience and expertise into standards -based solutions.

The knowledge embodied in our standards has been carefully assembled in a dependable format and refined through our open consultation process. Organizations of all sizes and across all sectors choose standards to help them achieve their goals.

Information on standards

We can provide you with the knowledge that your organization needs to succeed. Find out more about British Standards by visiting our website at bsigroup.com/standards or contacting our Customer Services team or Knowledge Centre.

Buying standards

You can buy and download PDF versions of BSI publications, including British and adopted European and international standards, through our website at bsigroup.com/shop, where hard copies can also be purchased.

If you need international and foreign standards from other Standards Development Organizations, hard copies can be ordered from our Customer Services team.

Subscriptions

Our range of subscription services are designed to make using standards easier for you. For further information on our subscription products go to bsigroup.com/subscriptions.

With **British Standards Online (BSOL)** you'll have instant access to over 55,000 British and adopted European and international standards from your desktop. It's available 24/7 and is refreshed daily so you'll always be up to date.

You can keep in touch with standards developments and receive substantial discounts on the purchase price of standards, both in single copy and subscription format, by becoming a **BSI Subscribing Member**.

PLUS is an updating service exclusive to BSI Subscribing Members. You will automatically receive the latest hard copy of your standards when they're revised or replaced.

To find out more about becoming a BSI Subscribing Member and the benefits of membership, please visit bsigroup.com/shop.

With a **Multi-User Network Licence (MUNL)** you are able to host standards publications on your intranet. Licences can cover as few or as many users as you wish. With updates supplied as soon as they're available, you can be sure your documentation is current. For further information, email bsmusales@bsigroup.com.

Revisions

Our British Standards and other publications are updated by amendment or revision.

We continually improve the quality of our products and services to benefit your business. If you find an inaccuracy or ambiguity within a British Standard or other BSI publication please inform the Knowledge Centre.

Copyright

Useful Contacts:

Customer Services
Tel: +44 845 086 9001
Email (orders): orders@bsigroup.com
Email (enquiries): cservices@bsigroup.com

Subscriptions
Tel: +44 845 086 9001
Email: subscriptions@bsigroup.com

Knowledge Centre
Tel: +44 20 8996 7004
Email: knowledgecentre@bsigroup.com

Copyright & Licensing
Tel: +44 20 8996 7070
Email: copyright@bsigroup.com

BSI, 389 Chiswick High Road
London W4 4AL
United Kingdom
www.bsigroup.com

9 780580 881701